VOLTAGE TRANSDUCERS

RMS VOLTAGE TRANSDUCER — *MODEL* AVTR

ACCURATE TO 0.25% FULL SCALE

FEATURES

- Accurate measurement of the **true RMS** value of input signals over a frequency range of 48-420Hz.

INPUT	STANDARD OUTPUTS MODEL NUMBER AVTR-			
AC VOLTAGE	0-1mA	4-20mA	0-10Vdc	0-5Vdc
0 to 150	001B	001E	001D	001X5
0 to 300	002B	002E	002D	002X5
0 to 600	004B	004E	004D	004X5

All std. units require 115Vac, +15% instrument power,(50-60Hz.).
Optional 230VAC instrument power-Add suffix **"-22"**.

APPLICATIONS

- For use in applications where measurement of non-sinusoidal waveforms is required.
- AVTR-001 series can be used with higher voltage potential transformers.

c UL us LISTED

ORDERING INFORMATION
Example:
Single Phase 120Vac Input with 0-10Vdc Output.
AVTR-001D

MODEL AVTR SPECIFICATIONS

INPUT

Voltage ..... See Table
Frequency Range ..... 48 to 420 Hz.
Burden ..... 150V ..... < 0.15VA
300V ..... < 0.30VA
600V ..... < 0.6VA
Overload ..... 150V & 300V Model ... Full Scale Rating
600V Model 575V
Dielectric Test ..... (Input/Output/Case) 2200Vac
Instrument Power
Standard ..... 115Vac, +15%,50-60Hz.,3.5VA
-22 Option ..... 230Vac, +15%,50-60Hz.,3.5VA

OUTPUT

Output Ripple ..... Less than 1.0% F.S.
Response (90%) ..... 100 milliseconds
Output Loading (OHMS)
0-1mA 0-10K
0-10Vdc ..... 2K min.
4-20mA 0-500
Field Adjustable Cal. ..... + 10%
ACCURACY ..... + 0.5% F.S. (at 60 Hz.)
Includes effects of linearity & setpoint.
Typical ..... + 0.5% over entire frequency range
Temperature Effect.....(-20°C to 60°C) ..... + 1.0% RDG.

CASE DIMENSIONS

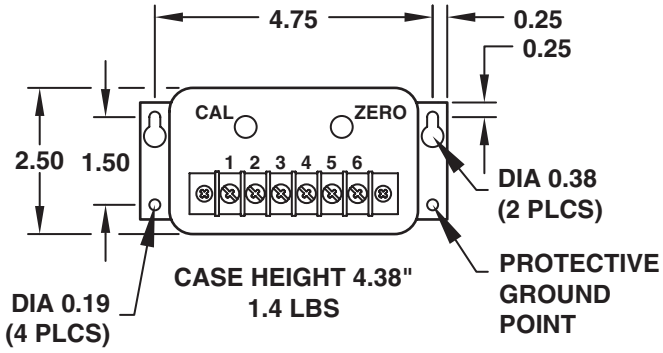

All Dimensions In Inches

CONNECTION DIAGRAM

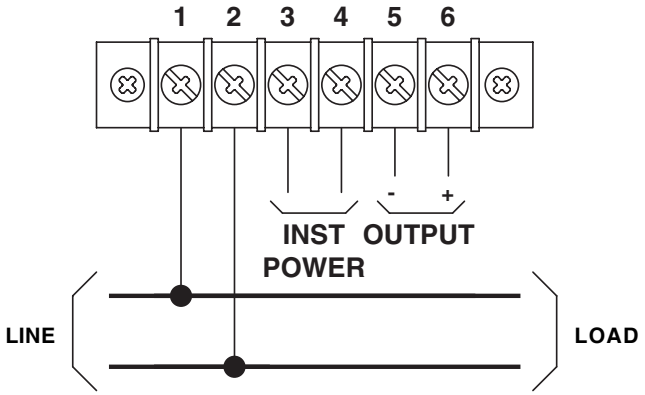

FLEX-CORE®
Div. Morlan & Associates, Inc.
6625 McVey Blvd. Columbus, Ohio 43235
WWW.FLEX-CORE.COM
sales@flex-core.com
PHONE (614) 889-6152
TECH. ASSISTANCE (614) 876-8308
FAX # (614) 876-8538