ANALOG PANEL METERS

ANALOG PANEL METERS — *MODEL* CLE8

SPECIFICATIONS

Accuracy ..... 2% @ 50/60Hz
Type ..... Iron Vane
ANSI Specification ..... All meters meet ANSI C39.1 - 1981
Overload
Voltmeters ..... 150% momentary; 120% sustained
Ammeters Momentary - 10 x rated current, 10 consecutive intervals of 1/2 second with a 1 minute interval between successive applications; sustained, 120%for 6 hours.
Scale Length ..... 3 1/2" = 3.06" ..... 4 1/2" = 3.82"
Scale Arc ..... 90°
Insulation Level ..... 2600VRMS, 1 min.
Burden Data ..... AC Ammeter ..... 0.7VA, 0.7PF lag
AC Voltmeter ..... 0.8VA unity PF
Response Time ..... 2.5 sec. max.
Resistance ..... ± 30% iron-vane
Shielding ..... All high current AC meters contain internal shielding

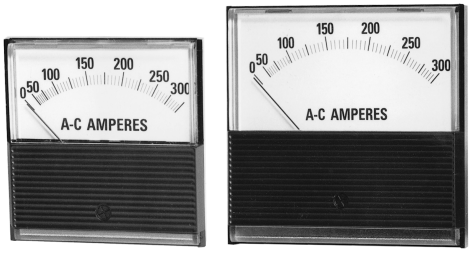

Iron-Vane meters are pivot and jewel
* Transformers not supplied with meter

AC VOLTMETERS

Type	Rating and Scale	Terminal Resistance(Ω)	CATALOG NUMBER 3 1/2	CATALOG NUMBER 4 1/2"
AC VOLTMETERS (self-contained) Iron-Vane 50/60 Hz	0-150V	30K	CLE8-V3A150	CLE8-V4A150
	0-300V	60K	CLE8-V3A300	CLE8-V4A300
	0-600V	120K	CLE8-V3A600	CLE8-V4A600
AC VOLTMETERS (Transformer-rated)* 0-150V rated.	0-600V	30K	CLE8-X3A600	CLE8-X4A600
	0-3000V	30K	CLE8-X3A3000	CLE8-X4A3000
	0-5250V	30K	CLE8-X3A5250	CLE8-X4A5250
	0-6KV	30K	CLE8-X3A6K	CLE8-X4A6K
	0-9KV	30K	CLE8-X3A9K	CLE8-X4A9K
	0-15KV	30K	CLE8-X3A15K	CLE8-X4A15K
	0-18KV	30K	CLE8-X3A18K	CLE8-X4A18K

AC AMMETERS

Type	Rating and Scale	Terminal Resistance(Ω)	CATALOG NUMBER 3 1/2	CATALOG NUMBER 4 1/2"
AC AMMETERS Transformer-rated, 0-5A RATED. Iron-Vane 60Hz nom. 50-400 Hz range. Transformers not supplied.	0-50A	.01	CLE8-A3A500	CLE8-A4A500
	0-100A	.01	CLE8-A3A101	CLE8-A4A101
	0-150A	.01	CLE8-A3A151	CLE8-A4A151
	0-200A	.01	CLE8-A3A201	CLE8-A4A201
	0-300A	.01	CLE8-A3A301	CLE8-A4A301
	0-400A	.01	CLE8-A3A401	CLE8-A4A401
	0-500A	.01	CLE8-A3A501	CLE8-A4A501
	0-600A	.01	CLE8-A3A601	CLE8-A4A601
	0-800A	.01	CLE8-A3A801	CLE8-A4A801
	0-1000A	.01	CLE8-A3A102	CLE8-A4A102
	0-1200A	.01	CLE8-A3A122	CLE8-A4A122
	0-1500A	.01	CLE8-A3A152	CLE8-A4A152
	0-1600A	.01	CLE8-A3A162	CLE8-A4A162
	0-2kA	.01	CLE8-A3A2K	CLE8-A4A2K
	0-2500A	.01	CLE8-A3A252	CLE8-A4A252
	0-3kA	.01	CLE8-A3A3K	CLE8-A4A3K
	0-4kA	.01	CLE8-A3A4K	CLE8-A4A4K

MOUNTING/DIMESIONS

3 1/2"

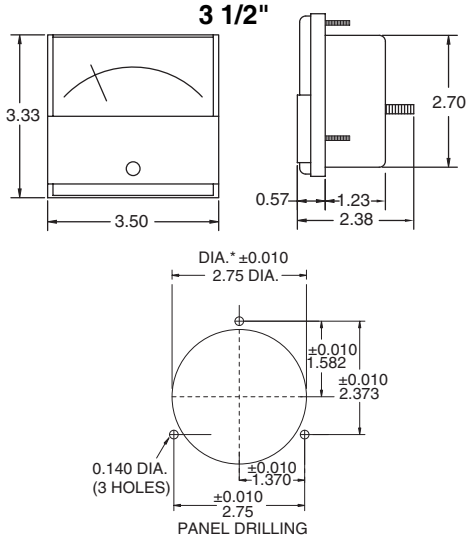

4 1/2"

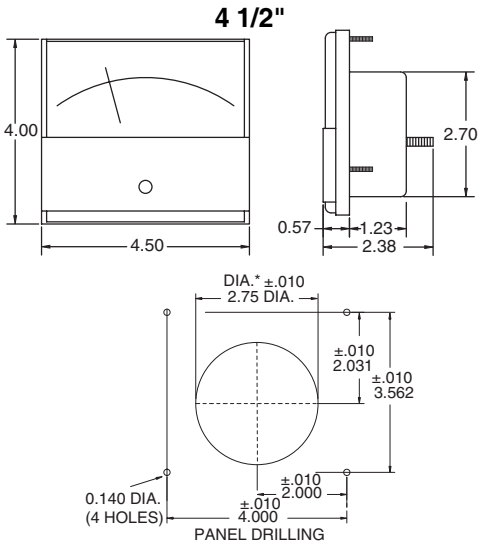

All Dimensions In Inches

FLEX-CORE®
Div. Morlan & Associates, Inc.
6625 McVey Blvd. Columbus, Ohio 43235

WWW.FLEX-CORE.COM
sales@flex-core.com

PHONE (614) 889-6152
TECH. ASSISTANCE (614) 876-8308
FAX # (614) 876-8538