CURRENT TRANSDUCERS

SPLIT-CORE CURRENT TRANSFORMER/TRANSDUCER *MODEL* SCT

c UL us LISTED File E167120

SCT

DESCRIPTION

The SCT is an integrated split-core current transformer and transducer which provides an output proportional to current ranges up to 500 amperes. The SCT has models which provide either a self-powered 0-1mA or 0-5Vdc or a loop-powered 4-20mA output.The dc output is proportional to the average absolute value of the input and is calibrated to represent the RMS value. The SCT is capable of accurately measuring ac inputs from 50 to 400Hz.

FEATURES

- Insensitive to polarity.
- Split-Core design for easy installation.
- Accurate and reliable from 50 to 400Hz.

INPUT AC AMPS	MODEL SCT- STANDARD OUTPUTS		
	0-1mA*	4-20mA**	0-5Vdc*
0-50	**050A**	**050E2**	**050CX5**
0-100	**100A**	**100E2**	**100CX5**
0-200	**200A**	**200E2**	**200CX5**
0-300	**300A**	**300E2**	**300CX5**
0-400	**400A**	**400E2**	**400CX5**
0-500	**500A**	**500E2**	**500CX5**

APPLICATIONS

- Designed for applications requiring accurate current measurements.

ORDERING INFORMATION
Example: 100 Amp ac input with 4-20mA loop powered output
SCT-100E2

***0-1mA & 0-5Vdc self-powered from measured line.**
****4-20mA Loop-powered (15-40Vdc supply required)**

SPECIFICATIONS

INPUT
Current ..... See Tables
Frequency Range ..... 50 to 400Hz
Burden ..... 0.5VA max.
Current overload ..... 5 times rating for 10 sec./hr
Dielectric Test (Input/Output/Case). 1800Vac
INSTRUMENT POWER
*Self-Powered ..... 1mA & 5Vdc models
**Loop-Powered ..... 15-40Vdc supply required

OUTPUT
Output Ripple ..... < 0.5% F.S.
Response (90%) ..... < 300 milliseconds
Output Loading (Ohms) ..... 1mA ..... 0-10K Ohms
5Vdc .... > 100K Ohms
4-20mA ... 0-500 Ohms
ACCURACY .... (25° C, 60Hz) ..... ± 0.5 % F.S.
(All conditions) ..... ± 0.7 % F.S.
Temperature Range ..... -20° to 60° C

CASE DIMENSIONS

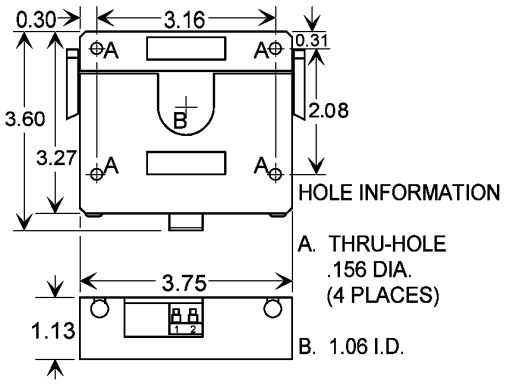

ALL DIMENSIONS IN INCHES

CONNECTION DIAGRAMS

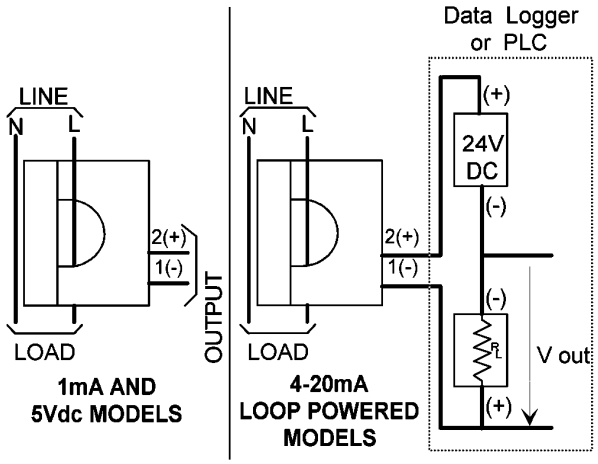

FLEX-CORE®
Div. Morlan & Associates, Inc.
6625 McVey Blvd. Columbus, Ohio 43235

WWW.FLEX-CORE.COM
flexcore@msn.com

PHONE (614) 889-6152
TECH. ASSISTANCE (614) 876-8308
FAX # (614) 876-8538