FLEX-CORE®

Div. Morlan & Associates, Inc.

4970 Scioto Darby Rd.
Hilliard, OH 43026

P: (614)889-6152
F: (614)876-8538

www.flex-core.com
sales@flex-core.com

Specialists in Measuring, Monitoring, and Control of Current, Power, and Energy



FLEX-CORE®

IS

CELEBRATING

43 YEARS

OF PROVIDING
SUPERIOR QUALITY AND SERVICE
TO OUR VALUED CUSTOMERS.

OUR COMMITMENT TO
CUSTOMER SATISFACTION
REMAINS OUR TOP PRIORITY.

FLEX-CORE®

THANKS YOU
FOR SELECTING OUR COMPANY
AS YOUR SUPPLIER.

REMEMBER TO CHECK OUR WEBSITE FOR NEW PRODUCTS AT
WWW.FLEX-CORE.COM

Our order form is now located online at
https://www.flex-core.com/purchase-order-form/

© 2017 Flex-Core Div. Morlan & Associates, Inc.

FLEX-CORE®
Div. Morlan & Associates, Inc.
4970 Scioto Darby Rd. Hilliard, Ohio 43026

WWW.FLEX-CORE.COM
sales@flex-core.com

PHONE (614) 889-6152
TECH. ASSISTANCE (614) 876-8308
FAX # (614) 876-8538

TABLE OF CONTENTS

	MODELS	PAGES
CURRENT TRANSFORMERS		
Flexible Split Core Current Transformers	FCL	4-7
Flexible Split Core Current Transformers (Non UL)	FC	8-9
Split Core Relay/Metering Class Current Transformers	FCR	10
Split Core Revenue Grade Current Transformers (0.333V)	4LSF	11
Split Core Revenue Grade Current Transformers (0.333V)	LN4F	12
Removable Leg Current Transformers (Multi-Ratio)	331	13
Removable Leg Current Transformers	600, 601, 617	14
Removable Leg Current Transformers	615, 616	15
Weatherproof Removable Leg Current Transformers	606, 608	16
Removable Leg Current Transformers	500T	17
Split Core Current Transformers (0.333V)	SCT-0400, SCT-0750	18
Split Core Current Transformers (0.333V)	SCT-1250, SCT-2000	19
Split Core Current Transformers (0.333V)	SCT-3000	20
Rogowski Coil Current Transformer(3V)	ACP	21
Rogowski Coil Current Transformer(0.333V)	RCS-1800, RCT-1800	22
AC Current Clamps-Microclamp	M1, M2	23
AC Current Clamps	NS	24
AC Current Clamps	H32, P32	25
AC Current Clamp Accessories	TMP, MMR, MMB	26
Solid Core Current Transformer (Small)	2RL, 7RL	27
Solid Core CT with Mounting Bracket (Small)	2SFT, 5SFT	28
Solid Core CT with Mounting Bracket	58RBL, 7RBL, 76RBL	29
Solid Core Metering Class CT	2DARL	30
Solid Core Metering Class CT	5ARL	31
Solid Core Metering Class CT	60RBT	32
Solid Core Metering Class CT	180RL	33
Solid Core Metering Class CT	19SHT, 19RL	34
Solid Core Metering Class CT	125, 126	35
Solid Core Metering Class CT (1.0V)	19SHT-1V, 125-1V, 126-1V	36
Solid Core Metering Class CT (Indoor/Optional Outdoor)	JAK-0C	37
High Accuracy Solid Core Metering Class CT	JAK-0S	38-39
Solid Core Metering Class CT	191, 194, 195	40
Solid Core Relay/Metering Class CT	110	41
Solid Core Relay/Metering Class CT	114	42
Solid Core Relay/Metering Class CT	130	43
Solid Core Relay/Metering Class CT	143/143MR	44-45
Solid Core Relay/Metering Class CT	780	46
Solid Core Relay/Metering Class CT	781MR	47-48
Solid Core Relay/Metering Class CT	147	49
600V Bar Type Current Transformer Metering (.3%)	CTM-0C	50
Wound Primary Current Transformer	189	51
Auxiliary and Summing Current Transformers	190X, 190XSUM	52
MV Bar Type Current Transformers, 5KV Class	CTWH3-60-T50	53
MV Bar Type Current Transformers, 5KV Class	JKM-3C	54
MV Bar Type Current Transformers, 15KV Class	JKM-5C	55
MV Outdoor Current Transformers, 5KV/8.7KV Class	JCK-3, JCK-4	56
MV Outdoor Current Transformers, 15KV Class	JCK-5C	57-58
POTENTIAL TRANSFORMERS		
Low Voltage (600V) Potential Transformers (.6%)	460, 468	59
Low Voltage Potential Transformers (.3%)	456	60
3P3W Low Voltage Potential Transformer	2VT469	61
3P Open Delta Low Voltage Potential Transformer	2VT460	62
3 Phase Low Voltage Potential Transformer	3VTL	63
3 Phase Low Voltage Potential Transformer	3VTN	64

FLEX-CORE®
Div. Morlan & Associates, Inc.
4970 Scioto Darby Rd. Hilliard, Ohio 43026

WWW.FLEX-CORE.COM
sales@flex-core.com

PHONE (614) 889-6152
TECH. ASSISTANCE (614) 876-8308
FAX # (614) 876-8538

TABLE OF CONTENTS

	MODELS	PAGES
POTENTIAL TRANSFORMERS (cont)		
MV Indoor Potential Transformer, 5KV Class	PT3	65
3P3W MV Indoor Potential Transformer, 5KV Class	3PT3	66
MV Indoor Potential Transformer, 15KV Class	PTG5	67-68
MV Outdoor Potential Transformer, 5KV Class	JVW-3	69
MV Outdoor Potential Transformer, 15KV Class	JVW-5C	70
ACCESSORIES		
Voltage and Current Switch Assembly/Fuse Block	U3889, KLK	71
DIN Rail Mount Fuse Block	BMM603, FP2	72
Shorting Terminal Blocks	17SC	73
Digital Counter/Elapsed Time Meter	E5-024-C0400, 240	74
CT Open Circuit Protector	OCP	75-76
Ground Fault Current Monitor	GFP, GFL	77-80
CURRENT RELAYS		
AC Current Set Point Relay	CRD-020	81
DC Current Set Point Relay	CRD-005	82
CURRENT SWITCHES		
AC Current Switches	CS, SCS	83
DC Current Operated Switches	DS3-SDT-24U	84
CURRENT TRANSFORMERS/TRANSDUCERS		
RMS Current Transducer/CT	CTRS	85
Split Core Current Transformer/Transducer	SCT	86
Low Cost Split Core CT/Transducer	H921, H922, H923	87
Split Core Current Transformer/Transducer	H221, H321, H421	88
Solid Core Current Transformer/Transducer	CTC	89
Solid Core RMS Current Transformer/Transducer	CTCR	90
Solid Core Current Transformer/Transducer	CTD	91
Solid and Split Core Current Transformer/Transducer	AT0, ATR0, AT1, ATR1, AT2, ATR2	92
Solid Core Current Transformer/Transducer	AT3, ATR3, AT4, ATR4	93
CURRENT TRANSDUCERS		
DIN Rail AC Current Transducer	MCT5	94
DIN Rail AC Current Transducer-RMS	MCTR	95
AC Current Transducer (UL)	ACT	96
3 Phase Current Transducer (UL)	3ACT	97
RMS Current Transducer (UL)	ACTR	98
3 Phase RMS Current Transducer	3CTR	99
RMS Current Transducer (.333V in = 4-20mA out)	MGT	100
DC Current Transducer	DT	101
DC and Variable Frequency RMS Current Transducer	CT7, CT8	102
Split Core DC Current Transducer	CT-4809	103
Split Core DC Current Transducer	CT-4812	104-105
Split Core DC Current Transducer	CT-4820	106
DC Current Transducer	CTG	107
DC Current Transducer	CTH	108-109
DC and RMS Current Transducers/Signal Conditioner	CTL, CTA	110-114
VOLTAGE TRANSDUCERS		
DIN Rail AC Voltage Transducer	MVT	115
AC Voltage Transducers (UL)	AVT	116
3 Phase Voltage Transducers (UL)	3AVT	117
RMS Voltage Transducers (UL)	AVTR	118
3 Phase RMS Voltage Transducers	3VTR	119
DIN Rail RMS Voltage Transducers	MVTR	120
DC or Variable Frequency Voltage Transducers	VT7, VT8	121

FLEX-CORE®
Div. Morlan & Associates, Inc.
4970 Scioto Darby Rd. Hilliard, Ohio 43026

WWW.FLEX-CORE.COM
sales@flex-core.com

PHONE (614) 889-6152
TECH. ASSISTANCE (614) 876-8308
FAX # (614) 876-8538

TABLE OF CONTENTS

	MODELS	PAGES
VOLTAGE TRANSDUCERS (cont)		
DC Voltage Transducer (Unidirectional)	VTU	122
DC High Voltage Transducer (Unidirectional)	VTH	123
WATT TRANSDUCERS		
DC Watt Transducer/Hall Probe	PC8	124-125
AC Watt Transducer	PC5, PC4	126-129
Precision AC Watt Transducer (UL)	AGW	130-131
AC Watt/PF/VA Transducer	PC20	132-134
Variable Frequency Watt Transducer/Hall Probe	P	135-137
Multiple Output AC Power Transducer	PTB	138-139
WATT OR VAR TRANSDUCERS		
Precision AC Watt and AC Var Transducers	GW5, GV5	140-142
WATT/VAR TRANSDUCERS		
Precision AC Watt/Var Transducers	GWV5	143-144
WATT HOUR TRANSDUCERS		
AC Watt/Watt Hour Transducers	W, W4	145-148
Precision Watt/Watt Hour Transducers	AGH	149-150
1 Phase Watt Hour Transducers/Split Core CT	SWH	151
WATT/WATT HOUR AND VAR/VAR HOUR TRANSDUCERS		
Precision AC Watt/Watt Hour and Var/Var Hour Transducers	GH, VGH	152-154
FREQUENCY TRANSDUCERS		
Frequency Transducers (UL)	AFT	155
PHASE ANGLE TRANSDUCERS		
Phase Angle Transducers	PF5	156-157
SIGNAL CONDITIONERS		
Process Signal Conditioners	SG	158
DIN Rail Process Signal Conditioner	MSG	159
SIGNAL CONVERTERS AND INTEGRATOR		
Precision Integrator and Current to Voltage Converter	VFC, LRB	160
PHASE LOSS MONITOR		
Phase Loss Monitor	257	161
Smart Socket for 257	SMART SOCKET	162
Current Unbalance Detector	272	163
VOLTAGE AND CURRENT SELECTOR SWITCHES		
Voltage and Current Selector Switches (Switchboard)	9524	164-166
Voltage and Current Selector Switches (Panelboard)	N25	167-170
ANALOG PANEL METERS		
Analog Panel Meter	HST90U	171
Outdoor Analog Panel Meter	584MM	172
ANALOG SWITCHBOARD METERS		
Industrial Switchboard Meter	HLS110	173
DIGITAL PANELBOARD METERS		
Digital Panelboard Meter (Programmable)	DL-40PSF	174
Digital Panel Mount Ammeter	DL-40PSF-DR-PS1-IA05	175
Digital Panel Mount Voltmeter	DL-40PSF-DR-PS1-IA01	176
Digital Bargraph Meter	FL-B101D40PS	177
Digital Panel Meter/Controller	DI-50T	178-179
DC SHUNTS		
DC Shunts	S	180
ALPHABETICAL INDEX		181

FLEX-CORE®
Div. Morlan & Associates, Inc.
4970 Scioto Darby Rd. Hilliard, Ohio 43026

WWW.FLEX-CORE.COM
sales@flex-core.com

PHONE (614) 889-6152
TECH. ASSISTANCE (614) 876-8308
FAX # (614) 876-8538

CURRENT TRANSFORMERS

SPLIT CORE CURRENT TRANSFORMER — *MODEL* FCL

FLEX-CORE® Circular and Rectangular Models



c UL us E186575



MADE IN U.S.A.

- **Most Ratios in Stock**
- **Seven Inside Diameter Sizes**
- **1 or 5 Amp Secondaries**
- **0-.333V or 1.0V Secondaries**
- **Custom Inserts Available**

CE RoHS COMPLIANT

FEATURES

These split core current transformers are designed for easy installation over busbar or cable in order to provide a precise representation of the primary current. There are solutions for most commercially available meters and instrumentation.

APPLICATIONS

- Watt Transducer
- Demand Meter
- Sub-Metering
- Current Transducer
- Power Factor Meter
- Instrumentation
- KWH Meter
- Current Sensing Relays
- Energy Management Systems

SPECIFICATIONS

Construction

Directional silicon steel is used for the flexible core. Secondary windings are of copper. Unit is encapsulated in silicone rubber which protects against moisture, dirt, oil and corona, salinity, and UV.

Insulation Level ..... 0.72kV, 10kV BIL Full Wave
Frequency 50-400Hz
Thermal Factor ..... 1.25 at 30°C, 1.0 at 55°C
Operating Temp Range ..... -45°C to +55°C
Altitude ..... Up to 4000 Meters
Accuracy ..... 200:5 thru 300:5 ..... 4%
400:5 thru 500:5 ..... 3%
600:5 thru 800:5 ..... 2%
1000:5 thru 6000:5 ..... 1%
Secondary Leads ..... 12 Ft. with Spade Connectors
Custom lead lengths are available.
Color ..... Transformer (red) - Leads (yellow)

Remains flexible from -45°C to +200°C
Meets IEC 61869 Standards

Caution: Current transformers are to be installed by qualified technicians only. The main conductor should be de-energized before installation.

ORDERING INFORMATION

FCL X X X X / X - X
RATIO
I.D.
-4 -6 -8 -11 -18 -R -R411
Example: 1000A Split Core with 6" Inside Diameter
FCL1000/5-6

Note: Open split core with a twisting motion only.

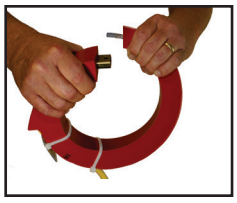

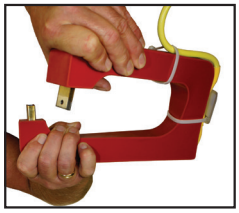

FLEX-CORE®
Div. Morlan & Associates, Inc.
4970 Scioto Darby Rd. Hilliard, Ohio 43026
WWW.FLEX-CORE.COM
sales@flex-core.com
PHONE (614) 889-6152
TECH. ASSISTANCE (614) 876-8308
FAX # (614) 876-8538

CURRENT TRANSFORMERS

SPLIT CORE CURRENT TRANSFORMERS *MODEL* FCL

SPECIFICATIONS: 5 AMP SECONDARY MODELS

CURRENT RATIO	INSIDE DIAMETER ROUND 4"	6"	8"	11"	18"	RECTANGLE -R	-R411	BURDEN CAPACITY	ACCURACY
200/5	X	-	-	-	-	-	-	2VA	4%
250/5	X	-	-	-	-	-	-	2VA	4%
300/5	X	X	-	-	-	-	-	2VA	4%
400/5	X	X	-	-	-	X	-	2VA	3%
500/5	X	X	-	-	-	X	-	3VA	3%
600/5	X	X	-	-	-	X	-	5VA	2%
800/5	X	X	-	-	-	X	-	2VA	1%
1000/5	X	X	X	-	-	X	-	5VA	1%
1200/5	X	X	X	-	-	X	-	5VA	1%
1500/5	X	X	X	X	-	X	X	15VA	1%
1600/5	X	X	X	X	-	X	X	15VA	1%
2000/5	X	X	X	X	X	X	X	25VA	1%
2400/5	-	X	X	X	X	X	X	30VA	1%
2500/5	-	X	X	X	X	X	X	35VA	1%
3000/5	-	X	X	X	X	X	X	45VA	1%
3500/5	-	X	X	X	X	X	X	45VA	1%
4000/5	-	X	X	X	X	X	X	45VA	1%
5000/5	-	-	X	X	X	-	X	45VA	1%
6000/5	-	-	-	X	X	-	X	45VA	1%

AVERAGE	4"	6"	8"	11"	18"	(R) 2 3/4"x6 5/8"	(R411) 4"x11"
WEIGHT	4.00 Lbs.	6.00 Lbs.	7.00 Lbs.	9.00 Lbs.	17 Lbs.	6.00 Lbs.	8.00 Lbs.

SPECIFICATIONS: 1 AMP SECONDARY MODELS

CURRENT RATIO	INSIDE DIAMETER ROUND 4"	6"	8"	11"	18"	RECTANGLE -R	-R411	BURDEN (Ω)	ACCURACY
200/1	X	-	-	-	-	-	-	0.5	1%
250/1	X	-	-	-	-	-	-	0.5	1%
300/1	X	-	-	-	-	-	-	0.5	1%
400/1	X	-	-	-	-	-	-	0.9	1%
500/1	X	X	-	-	-	X	-	2.0	1%
600/1	X	X	-	-	-	X	-	3.0	1%
800/1	X	X	-	-	-	X	-	5.0	1%
1000/1	X	X	X	-	-	X	X	10.0	1%
1200/1	-	X	X	-	-	X	X	15.0	1%
1500/1	-	X	X	X	-	X	X	15.0	1%
1600/1	-	X	X	X	-	X	X	15.0	1%
2000/1	-	X	X	X	X	-	X	18.0	1%
2400/1	-	-	X	X	X	-	X	20.0	1%
2500/1	-	-	X	X	X	-	X	20.0	1%
3000/1	-	-	-	X	X	-	-	20.0	1%

AVERAGE	4"	6"	8"	11"	18"	(R) 2 3/4"x6 5/8"	(R411) 4"x11"
WEIGHT	5.00 Lbs.	7.00 Lbs.	8.00 Lbs.	9.50 Lbs.	18 Lbs.	7.00 Lbs.	8.50 Lbs.

FLEX-CORE®
Div. Morlan & Associates, Inc.
4970 Scioto Darby Rd. Hilliard, Ohio 43026
WWW.FLEX-CORE.COM
sales@flex-core.com
PHONE (614) 889-6152
TECH. ASSISTANCE (614) 876-8308
FAX # (614) 876-8538

CURRENT TRANSFORMERS

SPLIT CORE CURRENT TRANSFORMERS *MODEL* FCL

SPECIFICATIONS: 1.0 VOLT SECONDARY MODELS

CURRENT RATIO	INSIDE DIAMETER ROUND 4"	6"	8"	11"	18"	RECTANGLE -R	-R411	ACCURACY
200/1Vac	X	-	-	-	-	-	-	1%
250/1Vac	X	-	-	-	-	-	-	1%
300/1Vac	X	-	-	-	-	-	-	1%
400/1Vac	X	-	-	-	-	-	-	1%
500/1Vac	X	X	-	-	-	X	-	1%
600/1Vac	X	X	-	-	-	X	-	1%
800/1Vac	X	X	-	-	-	X	-	1%
1000/1Vac	X	X	X	-	-	X	X	1%
1200/1Vac	-	X	X	-	-	X	X	1%
1500/1Vac	-	X	X	X	-	X	X	1%
1600/1Vac	-	X	X	X	-	X	X	1%
2000/1Vac	-	X	X	X	X	-	X	1%
2400/1Vac	-	-	-	X	X	-	X	1%
2500/1Vac	-	-	-	X	X	-	X	1%
3000/1Vac	-	-	-	X	X	-	-	1%

AVERAGE WEIGHT	4"	6"	8"	11"	18"	(R) 2 3/4"x6 5/8"	(R411) 4"x11"
	5.00 Lbs.	7.00 Lbs.	8.00 Lbs.	9.00 Lbs.	18 Lbs.	7.00 Lbs.	8.50 Lbs.

SPECIFICATIONS: 0.333 VOLT SECONDARY MODELS

CURRENT RATIO	INSIDE DIAMETER ROUND 4"	6"	8"	11"	18"	RECTANGLE -R	-R411	ACCURACY
200/0.333Vac	X	-	-	-	-	-	-	1%
250/0.333Vac	X	-	-	-	-	-	-	1%
300/0.333Vac	X	-	-	-	-	-	-	1%
400/0.333Vac	X	-	-	-	-	-	-	1%
500/0.333Vac	X	X	-	-	-	X	-	1%
600/0.333Vac	X	X	-	-	-	X	-	1%
800/0.333Vac	X	X	-	-	-	X	-	1%
1000/0.333Vac	X	X	X	-	-	X	X	1%
1200/0.333Vac	X	X	X	-	-	X	X	1%
1500/0.333Vac	X	X	X	X	-	X	X	1%
1600/0.333Vac	X	X	X	X	X	X	X	1%
2000/0.333Vac	-	X	X	X	X	X	X	1%
2400/0.333Vac	-	X	X	X	X	X	X	1%
2500/0.333Vac	-	X	X	X	X	X	X	1%
3000/0.333Vac	-	X	X	X	X	X	X	1%
3500/0.333Vac	-	X	X	X	X	X	X	1%
4000/0.333Vac	-	X	X	X	X	X	X	1%
5000/0.333Vac	-	-	X	X	X	-	X	1%
6000/0.333Vac	-	-	X	X	X	-	X	1%

AVERAGE WEIGHT	4"	6"	8"	11"	18"	(R) 2 3/4"x6 5/8"	(R411) 4"x11"
	4.00 Lbs.	6.00 Lbs.	7.00 Lbs.	9.00 Lbs.	17 Lbs.	6.00 Lbs.	8.00 Lbs.

FLEX-CORE®
Div. Morlan & Associates, Inc.
4970 Scioto Darby Rd. Hilliard, Ohio 43026
WWW.FLEX-CORE.COM
sales@flex-core.com
PHONE (614) 889-6152
TECH. ASSISTANCE (614) 876-8308
FAX # (614) 876-8538

CURRENT TRANSFORMERS

SPLIT CORE CURRENT TRANSFORMERS *MODEL* FCL

DIMENSIONS

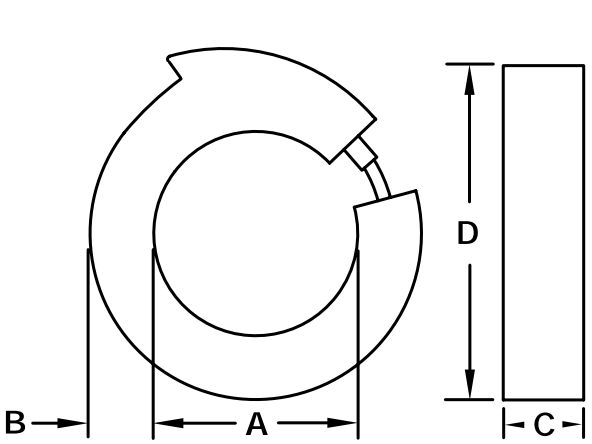

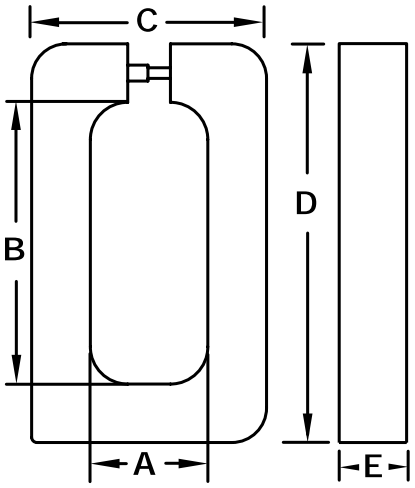

INSIDE DIAMETER	CIRCULAR			
A	B	C	D	MODEL
4	1 1/4	1 1/2	6 1/2	-4
6	1 1/4	1 1/2	8 1/2	-6
8	1 1/4	1 1/2	10 1/2	-8
11	1 1/4	1 1/2	13 1/2	-11
18	1 1/4	1 1/2	20 1/2	-18

INSIDE DIAMETER		RECTANGULAR			
A	B	C	D	E	MODEL
2 3/4	6 5/8	5 1/2	9 3/8	1 1/2	-R
4	11	6 1/2	13 3/8	1 1/2	-R411
All Dimensions In Inches *Black Wire = X1* *White Wire = X2*					

CUSTOM INSERTS FOR FCL, FC CURRENT TRANSFORMERS

FEATURES

- Silicone rubber inserts (split, solid, customized)
- Custom cutouts to fit buss or cable sizes
- Designed to make installations easier
- Makes installation look cleaner
- Fits exact I.D. of 4", 6", 8", 11", 18", R, or R411 model FCL or FC Current Transformers
- May be used on indoor or *outdoor applications
  *Model FC only

SPECIFICATIONS

- Silicone rubber
- Offers added isolations of 575V/Mil insulation
- Remains Flexible from -45°C to +200°C
- Orange Color



FLEX-CORE®
Div. Morlan & Associates, Inc.
4970 Scioto Darby Rd. Hilliard, Ohio 43026

WWW.FLEX-CORE.COM
sales@flex-core.com

PHONE (614) 889-6152
TECH. ASSISTANCE (614) 876-8308
FAX # (614) 876-8538

CURRENT TRANSFORMERS

SPLIT CORE CURRENT TRANSFORMER *MODEL* FC

FLEX-CORE® Circular and Rectangular Models



MADE IN U.S.A.



- **Seven Inside Diameter Sizes**
- **1 or 5 Amp Secondaries**
- **0-.333V or 1.0V Secondaries**
- **Custom Inserts Available**
- **Custom Ratios and Secondaries Available Upon Request.**

For Indoor or Outdoor Use
Request Mastic Pads for outdoor use.

FEATURES

These split core current transformers are designed for easy installation over busbar or cable to provide a precise representation of the primary current. There are solutions available for most commercially available meters and instrumentation.

APPLICATIONS

- Watt Transducer
- Demand Meter
- Sub-Metering
- Current Transducer
- Power Factor Meter
- Instrumentation
- KWH Meter
- Current Sensing Relays
- Energy Management Systems

SPECIFICATIONS

Construction
Directional silicon steel is used for the flexible core. Secondary windings are of copper. Unit is encapsulated in silicone rubber which protects against moisture, dirt, oil and corona, salinity, and UV.

Insulation Level ..... 0.72kV, 10kV BIL Full Wave
Frequency 50-400Hz

Safety Factor (5Amp secondary units only)
A self-contained voltage clamping circuit prevents dangerous high voltage across the secondary windings in case of accidental opening of the output leads when the primary circuit is energized. This circuit will trigger within 10 microseconds when the secondary voltage rises to 40 volts or more, clamping the output to less than 1 volt.

Thermal Factor ..... 1.25 at 30°C, 1.0 at 55°C
Operating Temp Range ..... -45°C to +55°C
Altitude ..... Up to 4000 Meters
Accuracy ..... 2500:5 thru 6000:5 ..... 1%
Secondary Leads ..... 12 Ft. with Spade Connectors
Custom lead lengths are available.
Color ..... Transformer (red) - Leads (yellow)
Remains flexible from -45°C to +200°C
Meets IEC 61869 Standards

Caution: Current transformers are to be installed by qualified technicians only. The main conductor should be de-energized before installation.

ORDERING INFORMATION

FC XXXX/X - X
RATIO
I.D.
-4 -6 -8 -11 -18 -R -R411
Example: 5000A Split Core with 6" Inside Diameter
FC5000/5-6

Note: Open split core with a twisting motion only.

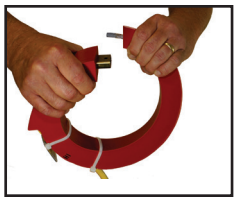

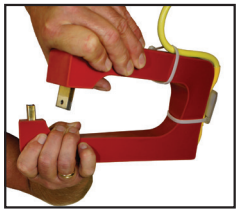

FLEX-CORE®
Div. Morlan & Associates, Inc.
4970 Scioto Darby Rd. Hilliard, Ohio 43026
WWW.FLEX-CORE.COM
sales@flex-core.com
PHONE (614) 889-6152
TECH. ASSISTANCE (614) 876-8308
FAX # (614) 876-8538

CURRENT TRANSFORMERS

SPLIT CORE CURRENT TRANSFORMERS *MODEL* FC

SPECIFICATIONS: 5 AMP SECONDARY MODELS

CURRENT RATIO	INSIDE DIAMETER ROUND 4"	6"	8"	11"	18"	RECTANGLE -R	-R411	BURDEN CAPACITY	ACCURACY
200/5	*	-	-	-	-	-	-	*	*
250/5	*	-	-	-	-	-	-	*	*
300/5	*	*	-	-	-	-	-	*	*
400/5	*	*	-	-	-	*	-	*	*
500/5	*	*	-	-	-	*	-	*	*
600/5	*	*	-	-	-	*	-	*	*
800/5	*	*	-	-	-	*	-	*	*
1000/5	*	*	*	-	-	*	-	*	*
1200/5	*	*	*	-	-	*	-	*	*
1500/5	*	*	*	*	-	*	*	*	*
1600/5	*	*	*	*	-	*	*	*	*
2000/5	*	*	*	*	*	*	*	*	*
2400/5	-	*	*	*	*	*	*	*	*
2500/5	-	X	X	X	X	X	X	35VA	1%
3000/5	-	X	X	X	X	X	X	45VA	1%
3500/5	-	X	X	X	X	X	X	45VA	1%
4000/5	-	X	X	X	X	X	X	45VA	1%
5000/5	-	X	X	X	X	X	X	45VA	1%
6000/5	-	X	X	X	X	X	X	45VA	1%

*Order as FCL Units. They are identical units and sold as model FCL.

AVERAGE WEIGHT	4"	6"	8"	11"	18"	(R) 2 3/4"x6 5/8"	(R411) 4"x11"
	4.00 Lbs.	6.00 Lbs.	7.00 Lbs.	9.00 Lbs.	17 Lbs.	6.00 Lbs.	8.00 Lbs.

DIMENSIONS

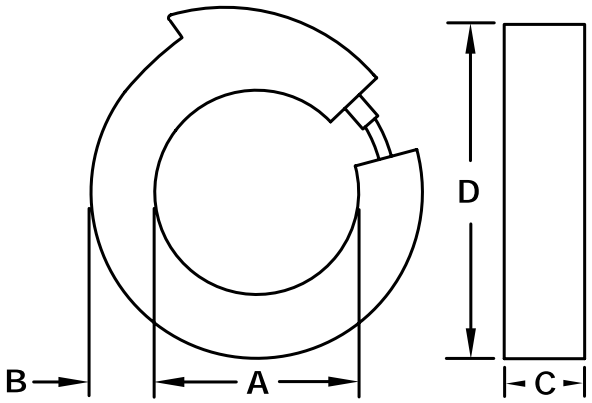

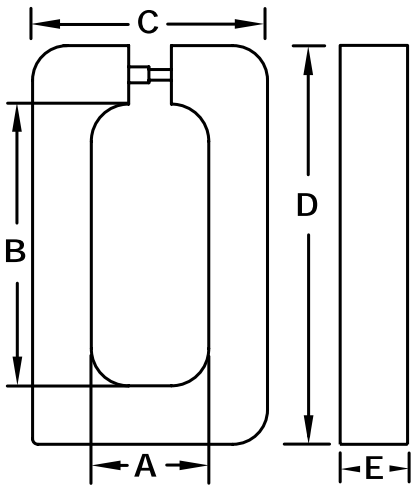

INSIDE DIAMETER A	CIRCULAR B	C	D	MODEL
4	1 1/4	1 1/2	6 1/2	-4
6	1 1/4	1 1/2	8 1/2	-6
8	1 1/4	1 1/2	10 1/2	-8
11	1 1/4	1 1/2	13 1/2	-11
18	1 1/4	1 1/2	20 1/2	-18

INSIDE DIAMETER A	RECTANGULAR B	C	D	E	MODEL
2 3/4	6 5/8	5 1/2	9 3/8	1 1/2	-R
4	11	6 1/2	13 3/8	1 1/2	-R411

All Dimensions In Inches
Black Wire = X1
White Wire = X2

FLEX-CORE®
Div. Morlan & Associates, Inc.
4970 Scioto Darby Rd. Hilliard, Ohio 43026
WWW.FLEX-CORE.COM
sales@flex-core.com
PHONE (614) 889-6152
TECH. ASSISTANCE (614) 876-8308
FAX # (614) 876-8538

CURRENT TRANSFORMERS

RELAY CLASS SPLIT CORE CURRENT TRANSFORMER *MODEL* FCR

- **Custom Primaries and Secondaries Available Upon Request**
- **For Use Over Insulated Bus • For Indoor Use**

MADE IN U.S.A.

RoHS COMPLIANT

FEATURES

These split core current transformers are designed for easy installation over busbar or cable to provide a precise representation of the primary current. There are solutions available for most commercially available meters and instrumentation.

APPLICATIONS

- Watt Transducer
- Current Transducer
- KWH Meter
- Demand Meter
- Power Factor Meter
- Current Sensing Relays
- Energy Management Systems



FCR800/5-R

ORDERING INFORMATION

FCR X X X X / X - X

RATIO

MODEL

-R, -RZ, -R411

Example: 5000A Split Core with 4"x11" Inside Diameter

FCR5000/5-R411

SPECIFICATIONS

Construction

Directional silicon steel is used for the core. Secondary windings are of copper. Unit is wrapped with heat set polyester and varnish impregnated.

Insulation Level.....0.6kV, 10kV BIL Full Wave
Frequency.....60Hz
Thermal Factor.....Refer to Chart
Operating Temp Range.....0°C to +105°C
Accuracy.....Refer to Chart
Secondary Terminals.....10-32 Screws (11 in. lbs. max)
Meets IEEE C57.13 Standards

-R and -RZ SPECIFICATIONS

CATALOG NUMBER	CURRENT RATIO	RELAY CLASS	ANSI METERING CLASS AT 60Hz					CONTINUOUS THERMAL RATING FACTOR
			B0.1	B0.2	B0.5	B0.9	B1.8	@30°C
FCR50/5-RZ*	50:5	C10	--	--	--	--	--	2.0
FCR100/5-RZ*	100:5	C20	--	--	--	--	--	2.0
FCR200/5-R	200:5	C20	2.4	--	--	-	--	1.5
FCR300/5-R	300:5	C30	1.2	--	--	--	--	1.5
FCR400/5-R	400:5	C50	1.2	--	--	--	--	1.5
FCR600/5-R	600:5	C75	0.6	--	--	--	--	1.5
FCR800/5-R	800:5	C100	0.3	0.6	--	--	--	1.5
FCR1000/5-R	1000:5	C100	0.3	0.3	--	--	--	1.33
FCR1200/5-R	1200:5	C125	0.3	0.3	0.6	--	--	1.33
FCR1500/5-R	1500:5	C150	0.3	0.3	0.3	0.6	--	1.33
FCR1600/5-R	1600:5	C150	0.3	0.3	0.3	0.6	--	1.33
FCR2000/5-R	2000:5	C200	0.3	0.3	0.3	0.3	0.6	1.33
FCR3000/5-R	3000:5	C300	0.3	0.3	0.3	0.3	0.3	1.0

-R411 SPECIFICATIONS

CATALOG NUMBER	CURRENT RATIO	RELAY CLASS	ANSI METERING CLASS AT 60Hz					CONTINUOUS THERMAL RATING FACTOR
			B0.1	B0.2	B0.5	B0.9	B1.8	@30°C
FCR600/5-R411	600:5	C75	0.6	--	--	--	--	1.5
FCR800/5-R411	800:5	C100	0.3	0.6	--	--	--	1.5
FCR1000/5-R411	1000:5	C100	0.3	0.3	--	--	--	1.33
FCR1200/5-R411	1200:5	C125	0.3	0.3	0.6	--	--	1.33
FCR1500/5-R411	1500:5	C150	0.3	0.3	0.3	0.6	--	1.33
FCR1600/5-R411	1600:5	C150	0.3	0.3	0.3	0.6	--	1.33
FCR2000/5-R411	2000:5	C200	0.3	0.3	0.3	0.3	0.6	1.33
FCR2500/5-R411	2500:5	C250	0.3	0.3	0.3	0.3	0.3	1.33
FCR3000/5-R411	3000:5	C300	0.3	0.3	0.3	0.3	0.3	1.33
FCR4000/5-R411	4000:5	C300	0.3	0.3	0.3	0.3	0.3	1.0
FCR5000/5-R411	5000:5	C400	0.3	0.3	0.3	0.3	0.3	1.0

DIMENSIONS

MODEL -R (*-RZ)

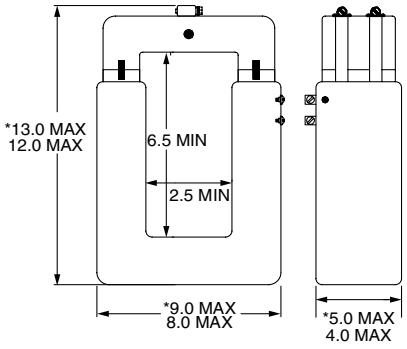

Weight
-RZ.....55 Lbs.
-R.....30 Lbs.

MODEL -R411

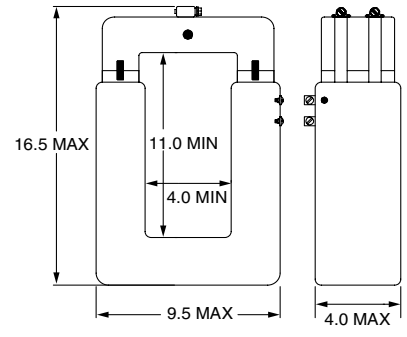

Weight
-R411.....40 Lbs.

All dimensions in inches.

FLEX-CORE®
Div. Morlan & Associates, Inc.
4970 Scioto Darby Rd. Hilliard, Ohio 43026
WWW.FLEX-CORE.COM
sales@flex-core.com
PHONE (614) 889-6152
TECH. ASSISTANCE (614) 876-8308
FAX # (614) 876-8538

CURRENT TRANSFORMERS

SPLIT CORE CURRENT TRANSFORMER — *MODEL* 4LSF

High Accuracy Revenue Grade Split Core Current Transformer

DESCRIPTION

The split core CTs are compact current transformers with high accuracy. The CTs are ideal for quick and easy installation without disconnecting cables during installation. Multiple installation mechanisms provide stable and durable current measurement.

FEATURES

- 333mV Output, Class 0.2 Accuracy
- Simple take apart style
- Can be installed on cable or bus
- 2.09" x 3.14" or 4.03" x 4.50" window sizes available
- Listed to UL2808, 61010-1, and CSA 22.2

600V CLASS

c UL us LISTED
E361441

RoHS COMPLIANT



SPECIFICATIONS

Rated Primary Current ..... 400A to 2400A
Rated Output 333mV
Rating Factor ..... 1.33 @ 30°C Ambient
Voltage Rating .....600Vac, rated CAT IV
Operating Ambient Temperature..... -40°C to 55°C
Accuracy.....IEC60044-1 0.2 Class
Leads.....8' 18AWG twisted

CATALOG NUMBER	ACCURACY	INPUT RATING	OUTPUT	DIMENSIONS		WEIGHT
				DIM A	DIM B	
4LSF-400A:333mV-2x3	0.2	400A	0.333Vac	4.25	5.00	1.5 Lbs.
4LSF-500A:333mV-2x3	0.2	500A	0.333Vac	4.25	5.00	1.5 Lbs.
4LSF-600A:333mV-2x3	0.2	600A	0.333Vac	4.25	5.00	1.5 Lbs.
4LSF-800A:333mV-2x3	0.2	800A	0.333Vac	4.625	5.25	1.5 Lbs.
4LSF-1000A:333mV-2x3	0.2	1000A	0.333Vac	4.625	5.25	1.5 Lbs.
4LSF-1200A:333mV-4x4.5	0.2	1200A	0.333Vac	6.62	6.50	3.0 Lbs.
4LSF-1500A:333mV-4x4.5	0.2	1500A	0.333Vac	7.25	7.25	3.0 Lbs.
4LSF-1600A:333mV-4x4.5	0.2	1600A	0.333Vac	7.25	7.25	3.0 Lbs.
4LSF-2000A:333mV-4x4.5	0.2	2000A	0.333Vac	7.25	7.25	3.0 Lbs.
4LSF-2400A:333mV-4x4.5	0.2	2400A	0.333Vac	7.25	7.25	3.0 Lbs.

DIMENSIONS

4LSF 2x3

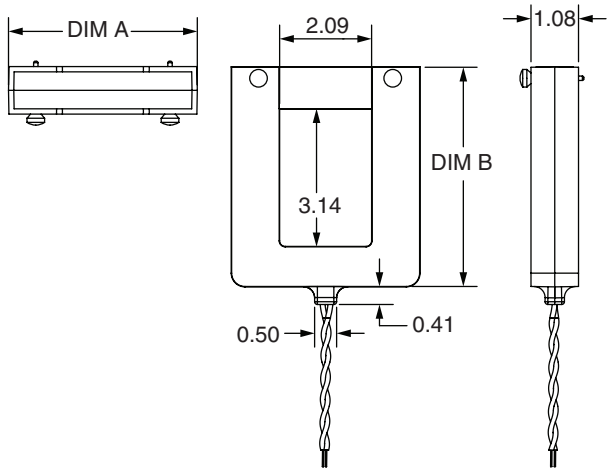

4LSF 4x4.5

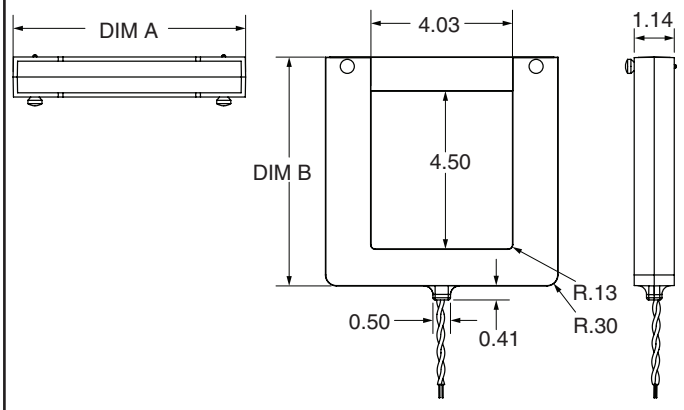

All Dimensions In Inches

FLEX-CORE®
Div. Morlan & Associates, Inc.
4970 Scioto Darby Rd. Hilliard, Ohio 43026

WWW.FLEX-CORE.COM
sales@flex-core.com

PHONE (614) 889-6152
TECH. ASSISTANCE (614) 876-8308
FAX # (614) 876-8538

CURRENT TRANSFORMERS

SPLIT CORE CURRENT TRANSFORMER *MODEL* LN4F

High Accuracy Revenue Grade Split Core Current Transformer

DESCRIPTION

The split core CTs are compact current transformers with high accuracy. The CTs are ideal for quick and easy installation without disconnecting cables during installation. Multiple installation mechanisms provide stable and durable current measurement.

600V CLASS

c UL us LISTED
E361441



FEATURES

- 333mV Output, Class 0.2 Accuracy
- Simple take apart style
- Can be installed on cable or bus
- 1.25"X1.33" window size
- Listed to UL2808, 61010-1, and CSA 22.2

SPECIFICATIONS

Rated Primary Current ..... 100A to 600A
Rated Output 333mV
Rating Factor ..... 1.33 @ 30°C Ambient
Voltage Rating ..... 600Vac, rated CAT III
Operating Ambient Temperature..... -40°C to 55°C
Accuracy.....IEC60044-1 0.2 Class
Leads.....8' 18AWG Twisted
Weight ..... 1.25 Lbs.

CATALOG NUMBER	ACCURACY	INPUT RATING	OUTPUT
LN4F-100A-333mV-1.25	0.2	100A	0.333Vac
LN4F-150A-333mV-1.25	0.2	150A	0.333Vac
LN4F-200A-333mV-1.25	0.2	200A	0.333Vac
LN4F-250A-333mV-1.25	0.2	250A	0.333Vac
LN4F-300A-333mV-1.25	0.2	300A	0.333Vac
LN4F-400A-333mV-1.25	0.2	400A	0.333Vac
LN4F-500A-333mV-1.25	0.2	500A	0.333Vac
LN4F-600A-333mV-1.25	0.2	600A	0.333Vac

DIMENSIONS

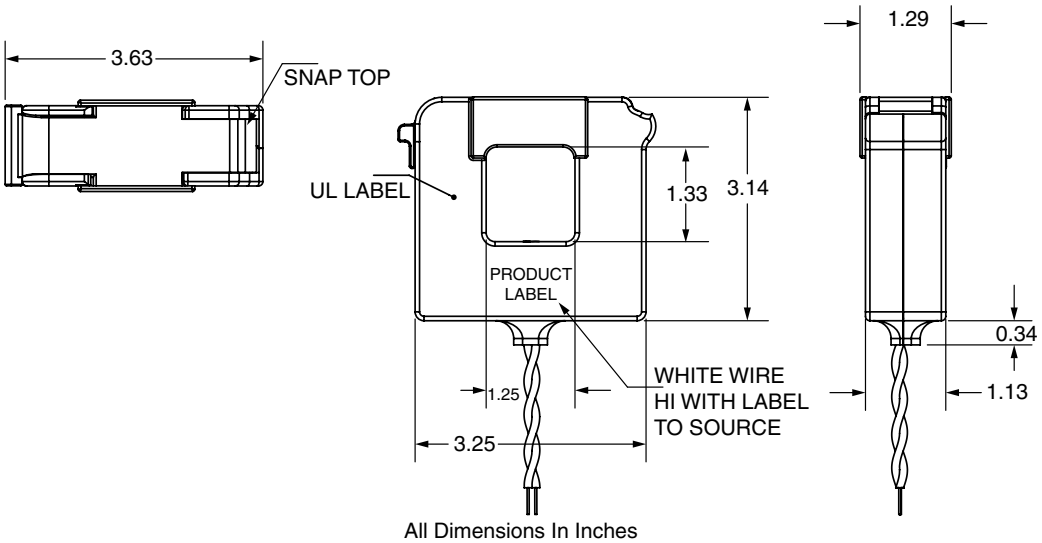

All Dimensions In Inches

FLEX-CORE®
Div. Morlan & Associates, Inc.
4970 Scioto Darby Rd. Hilliard, Ohio 43026
WWW.FLEX-CORE.COM
sales@flex-core.com
PHONE (614) 889-6152
TECH. ASSISTANCE (614) 876-8308
FAX # (614) 876-8538

CURRENT TRANSFORMERS

REMOVABLE LEG CURRENT TRANSFORMER *MODEL* 331

MULTI-RATIO

FEATURES

- Excellent measurement accuracy
- Multiple Ratio taps for wide range of primary currents
- Removable leg for easy installation
- Voltage clamping circuit across output terminals.

c UL us E238872 CSA 245941

MADE IN U.S.A.

RoHS COMPLIANT

600V CLASS



Model 331-100



Model 331-200

SPECIFICATIONS

Physical Characteristics

Material ..... Noryl PX9406 (UL Rated 94V-0)

Weight
Model 100 ..... 2 Lbs.
Model 200 ..... 2 Lbs.

Output Leads
Quantity ..... Four
Size ..... 16 AWG
Type ..... Stranded & Color-coded
Length ..... 24"

Electrical Characteristics
Output ..... (6) 2-Wire combinations with 5A F.S. Rating.
Frequency 50-400Hz
Maximum open circuit output voltage
40 volts peak, clamped to 1 volt within 5μs
Insulation ..... 0.6kV (UL 1244 or equivalent).
Continuous Thermal Rating Factor ..... 1.33 at 30°C, 1.0 at 55°C

RATIO	ACCURACY	SECONDARY CONNECTIONS
2000:5	±1%	Red/White & Green/White
1500:5	±1%	Red/White & Black/White
1200:5	±1%	Red/White & Blue/White
800:5	±2%	Blue/White & Green/White
500:5	±2%	Black/White & Green/White
300:5	±3%	Blue/White & Black/White

Power Measurement Accuracy(Transformer Correction Factor) is shown at 0.85 Power Factor, 0.2Ω Burden and at Rated Current.

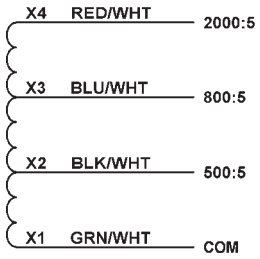

DIMENSIONS

Model 331-100

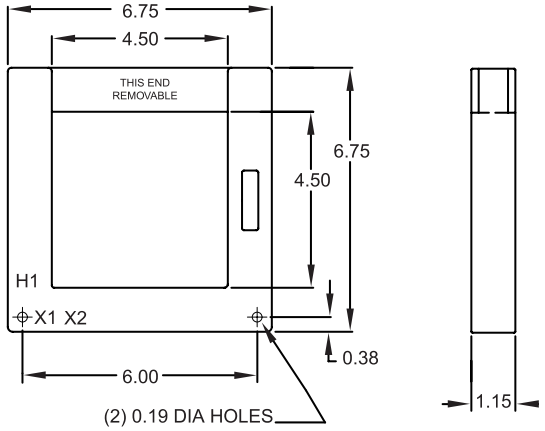

Model 331-200

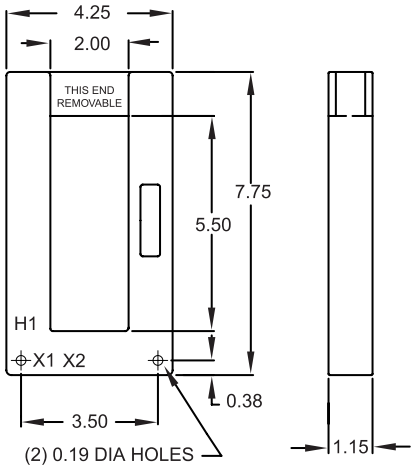

All Dimensions In Inches

FLEX-CORE®
Div. Morlan & Associates, Inc.
4970 Scioto Darby Rd. Hilliard, Ohio 43026

WWW.FLEX-CORE.COM
sales@flex-core.com

PHONE (614) 889-6152
TECH. ASSISTANCE (614) 876-8308
FAX # (614) 876-8538

CURRENT TRANSFORMERS

REMOVABLE LEG CURRENT TRANSFORMER *MODELS* 600, 601, 617

FEATURES

c UL us E238872 CSA 245941

- For energy management systems and instrumentation
- UL Recognized
- Window I.D.
  Model 600 - 2.00" x 5.50"
  Model 601 - 4.50" x 4.50"
  Model 617 - 2.00" x 3.50"



RoHS COMPLIANT

SPECIFICATIONS

Frequency 50-400Hz
Insulation Class ..... 0.6kV, 10kV BIL Full Wave
Terminals ..... 8-32 Brass Studs with one flat washer, lock washer, and regular nut
Weight ..... Approximately 1.5 Lbs.
Core and Windings ..... Encased in U.L. approved plastic
Manufactured to meet the requirements of ANSI/IEEE C57.13

MADE IN U.S.A.

600V CLASS

MODEL 600T APPLICATION AND ORDERING DATA

CATALOG NUMBER	CURRENT RATIO	V.A. @ 1% CLASS	ANSI METERING CLASS AT 60Hz			CONTINUOUS THERMAL RATING FACTOR	
			B0.1	B0.2	B0.5	@30°C	@55°C
600T-401	400:5	1.5	2.4	4.8	-	1.33	1.0
600T-501	500:5	2.0	2.4	4.8	-	1.33	1.0
600T-601	600:5	2.5	2.4	2.4	-	1.33	1.0
600T-801	800:5	5.0	1.2	1.2	2.4	1.33	1.0
600T-102	1000:5	7.5	1.2	1.2	2.4	1.33	1.0
600T-122	1200:5	15.0	0.6	1.2	1.2	1.33	1.0
600T-152	1500:5	20.0	0.6	0.6	1.2	1.33	1.0
600T-162	1600:5	20.0	0.6	0.6	1.2	1.33	1.0
600T-202	2000:5	30.0	0.6	0.6	0.6	1.33	1.0

MODEL 601T APPLICATION AND ORDERING DATA

CATALOG NUMBER	CURRENT RATIO	V.A. @ 1% CLASS	ANSI METERING CLASS AT 60Hz			CONTINUOUS THERMAL RATING FACTOR	
			B0.1	B0.2	B0.5	@30°C	@55°C
601T-401	400:5	1.0	4.8	-	-	1.33	1.0
601T-501	500:5	1.5	4.8	4.8	-	1.33	1.0
601T-601	600:5	2.0	2.4	4.8	-	1.33	1.0
601T-801	800:5	2.5	1.2	2.4	4.8	1.33	1.0
601T-102	1000:5	5.0	1.2	1.2	4.8	1.33	1.0
601T-122	1200:5	10.0	1.2	1.2	2.4	1.33	1.0
601T-152	1500:5	15.0	1.2	1.2	1.2	1.33	1.0
601T-162	1600:5	15.0	1.2	1.2	1.2	1.33	1.0
601T-202	2000:5	20.0	0.6	0.6	1.2	1.33	1.0

MODEL 617T APPLICATION AND ORDERING DATA

CATALOG NUMBER	CURRENT RATIO	V.A. @ 1% CLASS	ANSI METERING CLASS AT 60Hz			CONTINUOUS THERMAL RATING FACTOR	
			B0.1	B0.2	B0.5	@30°C	@55°C
617T-401	400:5	1.5	2.4	4.8	-	1.33	1.0
617T-501	500:5	2.0	2.4	4.8	-	1.33	1.0
617T-601	600:5	2.5	2.4	2.4	-	1.33	1.0
617T-801	800:5	5.0	1.2	1.2	2.4	1.33	1.0
617T-102	1000:5	7.5	1.2	1.2	2.4	1.33	1.0
617T-122	1200:5	15.0	0.6	1.2	1.2	1.33	1.0

*Flexible Lead Options Available - Consult Factory

DIMENSIONS

MODEL 600T

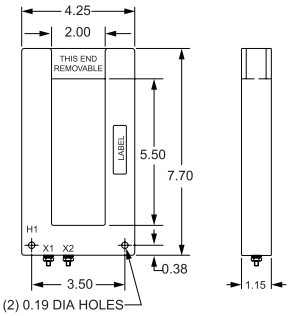

MODEL 601T

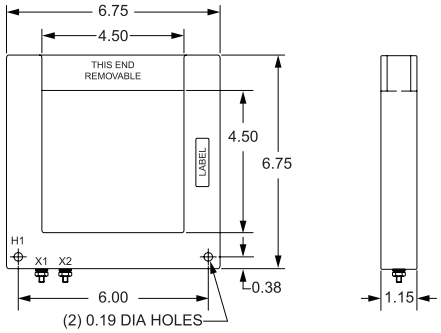

MODEL 617T

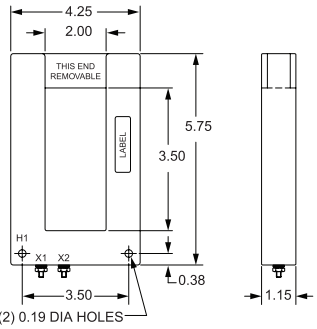

All Dimensions In Inches

These transformers are designed for assembly to an existing electrical installation without the need for dismantling the primary bus or cables.

CAUTION:
Proper safety precautions must be followed during installation by a trained electrician. Never install while bus is energized.

The current transformer must have its secondary terminals short circuited or the burden connected before energizing the primary circuit.

FLEX-CORE®
Div. Morlan & Associates, Inc.
4970 Scioto Darby Rd. Hilliard, Ohio 43026
WWW.FLEX-CORE.COM
sales@flex-core.com
PHONE (614) 889-6152
TECH. ASSISTANCE (614) 876-8308
FAX # (614) 876-8538

CURRENT TRANSFORMERS

REMOVABLE LEG CURRENT TRANSFORMER *MODEL* 615

FEATURES

- UL Recognized
- Window I.D. - 1.31" X 1.66"
- For Use with Instrumentation Equipment

SPECIFICATIONS

Frequency 50-400Hz
Insulation Class ..... 0.6kV, 10kV BIL Full Wave
Flexible leads..... UL1015 105°C, 16 AWG, 36" long.
Weight ..... Approximately 1.0 Lb.
Continuous Thermal Current Rating Factor
1.33@ 30°C Amb., 1.00@55°C Amb.

APPLICATION AND ORDERING DATA			
CATALOG NUMBER	CURRENT RATIO	ACCURACY	BURDEN
615-101	100:5	5%	1.0VA
615-151	150:5	5%	1.0VA
615-201	200:5	3%	2.0VA
615-251	250:5	2.5%	2.0VA
615-301	300:5	1%	3.5VA
615-401	400:5	1%	8.5VA

600V CLASS

c UL us E93779



MODEL 615 DIMENSIONS

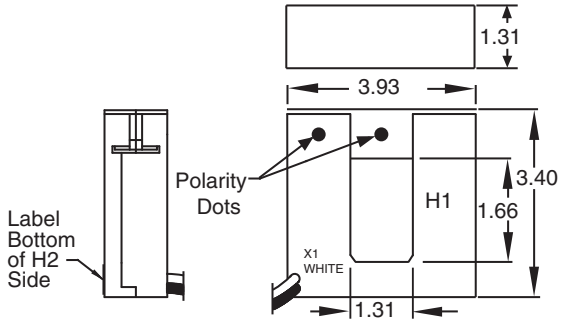

All Dimensions In Inches

REMOVABLE LEG CURRENT TRANSFORMER *MODEL* 616

FEATURES

- UL Recognized
- Window I.D. - 1.31" X 2.16"
- For Use with Instrumentation Equipment

SPECIFICATIONS

Frequency 50-400Hz
Insulation Class ..... 0.6kV, 10kV BIL Full Wave
Flexible Leads..... UL1015 105°C, 16 AWG, 36" long.
Weight ..... Approximately 1.2 Lbs.
Continuous Thermal Current Rating Factor
1.33@ 30°C Amb., 1.00@55°C Amb.

APPLICATION AND ORDERING DATA			
CATALOG NUMBER	CURRENT RATIO	ACCURACY	BURDEN
616-201	200:5	3%	2VA
616-301	300:5	2%	3VA
616-401	400:5	1%	5VA
616-501	500:5	1%	5VA
616-601	600:5	1%	5VA
616-801	800:5	1%	5VA

600V CLASS

c UL us E93779



MODEL 616 DIMENSIONS

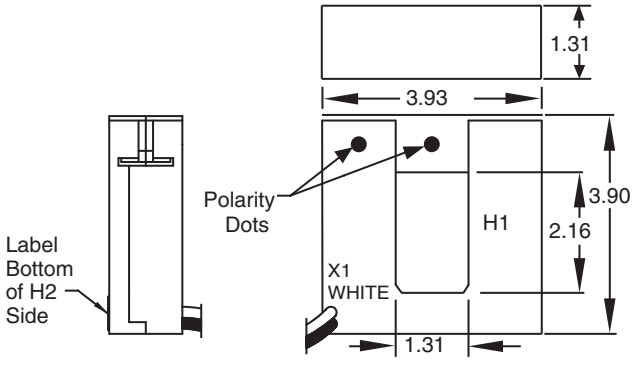

All Dimensions In Inches

FLEX-CORE®
Div. Morlan & Associates, Inc.
4970 Scioto Darby Rd. Hilliard, Ohio 43026
WWW.FLEX-CORE.COM
sales@flex-core.com
PHONE (614) 889-6152
TECH. ASSISTANCE (614) 876-8308
FAX # (614) 876-8538

CURRENT TRANSFORMERS

SPLIT CORE CURRENT TRANSFORMER — *MODEL* 606

FEATURES

- **WEATHERPROOF** for outdoor applications.
- For use with energy management systems and instrumentation.
- Transformer case is UV stabilized thermoplastic, filled with polyurethane resin.
- UL Recognized (UL 506).
- Meets C57.13 ANSI specifications.
- Clamps made of steel for extra durability.



SPECIFICATIONS

Accuracy 1%
200:5-300:5 ..... 2%
Frequency 50-400Hz
Insulation Class ..... 0.6kV, 10kV BIL Full Wave
Secondary Cable ..... Two No. 16 AWG, 6' long
Direct Burial U.V. Res. U.L. Type TC.
Weight ..... Approximately 5 Lbs..
Window Size ..... 2.75" X 2.65"

600V CLASS

c UL us E238872 CSA 245941

MODEL 606 APPLICATION AND ORDERING DATA

CATALOG NUMBER	CURRENT RATIO	BURDEN VA	ACCURACY @ 60Hz	CONTINUOUS THERMAL RATING FACTOR @30°C
606-201	200:5	2	2%	1.33
606-251	250:5	2	2%	1.33
606-301	300:5	3	2%	1.33
606-401	400:5	4	1%	1.33
606-501	500:5	6	1%	1.33
606-601	600:5	8	1%	1.33
606-801	800:5	12	1%	1.33
606-102	1000:5	15	1%	1.33
606-122	1200:5	20	1%	1.33

DIMENSIONS

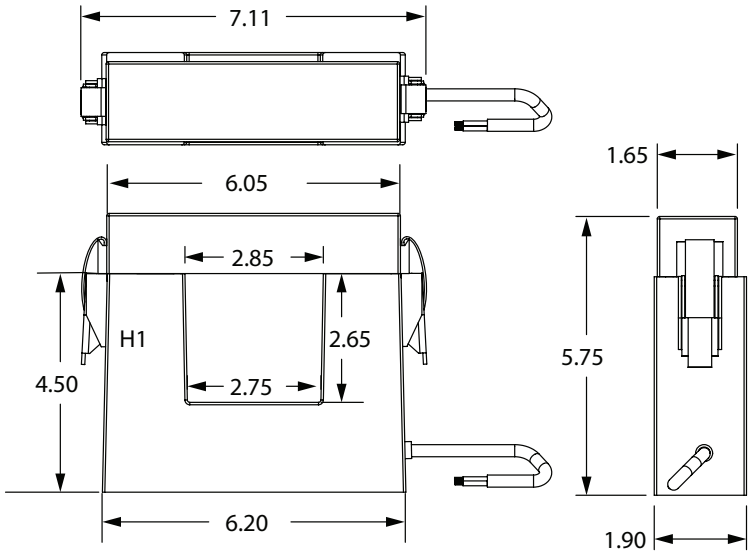

All Dimensions In Inches

FLEX-CORE®
Div. Morlan & Associates, Inc.
4970 Scioto Darby Rd. Hilliard, Ohio 43026
WWW.FLEX-CORE.COM
sales@flex-core.com
PHONE (614) 889-6152
TECH. ASSISTANCE (614) 876-8308
FAX # (614) 876-8538

CURRENT TRANSFORMERS

SPLIT CORE CURRENT TRANSFORMER — *MODEL* 608

FEATURES

- **WEATHERPROOF** for outdoor applications.
- For use with energy management systems and instrumentation.
- Transformer case is UV stabilized thermoplastic, filled with polyurethane resin.
- UL Recognized (UL 506).
- Meets C57.13 ANSI specifications.
- Clamps made of steel for extra durability.



600V CLASS

c UL us E238872 CSA 245941

SPECIFICATIONS

Accuracy ..... See Chart Below
Frequency 50-400Hz
Insulation Class ..... 0.6kV, 10kV BIL Full Wave
Secondary Cable ..... Two No. 16 AWG, 6' long
Direct Burial U.V. Res. U.L. Type TC.
Weight ..... Approximately 8 Lbs.
Window Size ..... 2.60" X 6.25"

MODEL 608 APPLICATION AND ORDERING DATA

CATALOG NUMBER	CURRENT RATIO	ANSI METERING CLASS @ 60 HZ					VA +/- AT 1% CLASS	SECONDARY WINDING RESISTANCE	CONTINUOUS THERMAL RATING FACTOR	
		B0.1	B0.2	B0.5	B0.9	B1.8			@ 30°C	@ 55°C
608-501	500:5	1.2	1.2	4.8	-	-	4	0.061	1.33	1.00
608-601	600:5	1.2	1.2	4.8	-	-	6	0.085	1.33	1.00
608-801	800:5	1.2	1.2	2.4	4.8	-	10	0.097	1.33	1.00
608-102	1000:5	0.6	1.2	1.2	2.4	4.8	12	0.126	1.33	1.00
608-122	1200:5	0.6	0.6	1.2	1.2	2.4	16	0.153	1.33	1.00
608-152	1500:5	0.6	0.6	1.2	1.2	2.4	25	0.257	1.33	1.00
608-162	1600:5	0.6	0.6	0.6	1.2	2.4	27	0.398	1.33	1.00
608-202	2000:5	0.6	0.6	0.6	1.2	1.2	33	0.508	1.33	1.00
608-252	2500:5	0.3	0.6	0.6	0.6	1.2	42	0.642	1.00	0.7
608-302	3000:5	0.3	0.6	0.6	0.6	1.2	50	0.835	1.00	0.7
608-322	3200:5	0.3	0.3	0.6	0.6	1.2	54	0.877	1.00	0.7

DIMENSIONS

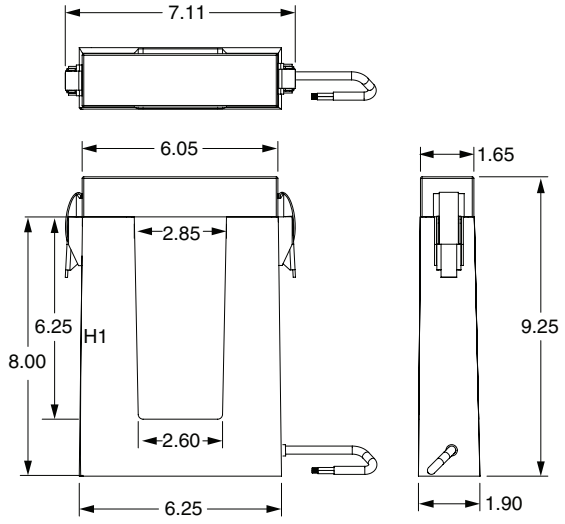

All Dimensions In Inches

FLEX-CORE®
Div. Morlan & Associates, Inc.
4970 Scioto Darby Rd. Hilliard, Ohio 43026
WWW.FLEX-CORE.COM
sales@flex-core.com
PHONE (614) 889-6152
TECH. ASSISTANCE (614) 876-8308
FAX # (614) 876-8538

CURRENT TRANSFORMERS

REMOVABLE LEG CURRENT TRANSFORMER — MODEL 500T

FEATURES

- UL Recognized
- Window I.D. - Available up to 10" X 30"
- Metering Applications

c UL us E238872 ® 245941

MADE IN U.S.A.

600V CLASS

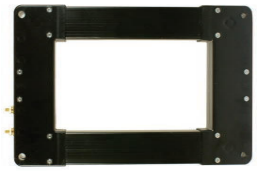

SPECIFICATIONS

Frequency 50-400Hz
Insulation Class ..... 0.6kV, 10kV BIL Full Wave
Continuous Thermal Rating Factor ..... 1.33 @ 30°C amb., 1.0 @ 55°C amb.
Terminals ..... Brass Studs No. 8-32 UNC with one flat washer, lock washer and regular nut.
Weight ..... Approximately 8-18 Lbs.

Manufactured to meet the requirements of ANSI/IEEE C57.13

The accuracy table below is for the 500T041 X 117. Accuracy for other sizes are available from the factory. The dimensions in the table at right are standard sizes. Other window lenghts (B1) may be accommodated on special order. Window widths (A1) other than those listed are not available.

RATIO NUMBER	RATIO	B0.1	B0.2	B0.5	ACCURACY CLASS WITH U.P.F. BURDEN
301	300:5	-	-	-	5% @ 1.5VA
401	400:5	-	-	-	3% @ 2.5VA
501	500:5	-	-	-	2% @ 2.5VA
601	600:5	4.8	-	-	1% @ 4.0VA
751	750:5	4.8	-	-	1% @ 5.0VA
801	800:5	2.4	-	-	1% @ 5.0VA
102	1000:5	2.4	4.8	-	1% @ 7.5VA
122	1200:5	1.2	2.4	-	1% @ 10.0VA
152	1500:5	1.2	1.2	2.4	1% @ 12.5VA
202	2000:5	0.6	1.2	2.4	1% @ 15.0VA
252	2500:5	0.6	0.6	1.2	1% @ 25.0VA
302	3000:5	0.6	0.6	1.2	1% @ 25.0VA
352	3500:5	0.6	0.6	0.6	1% @ 25.0VA
402	4000:5	0.3	0.6	0.6	1% @ 25.0VA
502	5000:5	0.3	0.3	0.3	1% @ 30.0VA
602	6000:5	0.3	0.3	0.3	1% @ 40.0VA

DIMENSIONS

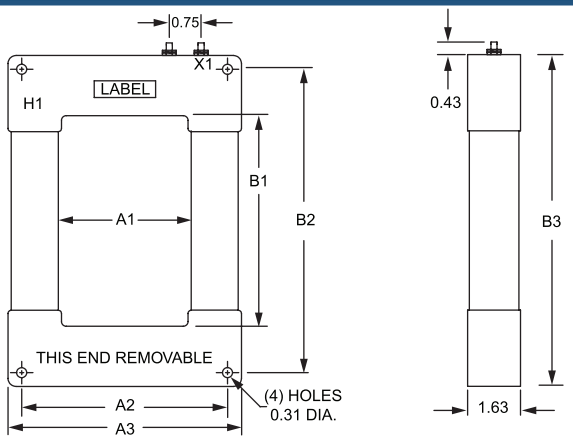

All Dimensions In Inches

HOW TO ORDER RECTANGULAR C.T.'S

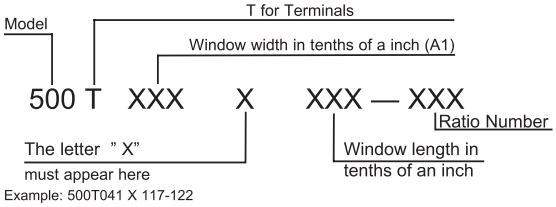

Example: 500T041 X 117-122

DIMENSIONS						MAX. RATIO
A1	A2	A3	B1	B2	B3	
4.1	6.4	7.3	7.1	10.0	10.9	4000:5
4.1	6.4	7.3	11.7	14.5	15.4	8000:5
4.1	6.4	7.3	14.1	17.0	17.9	8000:5
4.1	6.4	7.3	18.1	21.0	21.9	8000:5
4.1	6.4	7.3	24.0	27.0	27.9	10000:5
4.1	6.4	7.3	30.1	33.0	33.9	10000:5
5.1	7.2	8.3	7.1	10.0	10.9	4000:5
5.1	7.2	8.3	11.7	14.5	15.4	8000:5
5.1	7.2	8.3	14.1	17.0	17.9	8000:5
5.1	7.2	8.3	18.1	21.0	21.9	8000:5
5.1	7.2	8.3	24.0	27.0	27.9	10000:5
5.1	7.2	8.3	30.1	33.0	33.9	10000:5
5.8	7.0	9.0	7.1	10.0	10.9	4000:5
5.8	7.0	9.0	11.7	14.5	15.4	8000:5
5.8	7.0	9.0	14.1	17.0	17.9	8000:5
5.8	7.0	9.0	18.1	21.0	21.9	8000:5
5.8	7.0	9.0	24.0	27.0	27.9	10000:5
5.8	7.0	9.0	30.1	33.0	33.9	10000:5
8.0	9.5	11.1	7.1	10.0	10.9	4000:5
8.0	9.5	11.1	11.7	14.5	15.4	8000:5
8.0	9.5	11.1	14.1	17.0	17.9	8000:5
8.0	9.5	11.1	18.1	21.0	21.9	8000:5
8.0	9.5	11.1	24.0	27.0	27.9	10000:5
8.0	9.5	11.1	30.1	33.0	33.9	10000:5
10.1	11.6	13.2	7.1	10.0	10.9	4000:5
10.1	11.6	13.2	11.7	14.5	15.4	8000:5
10.1	11.6	13.2	14.1	17.0	17.9	8000:5
10.1	11.6	13.2	18.1	21.0	21.9	8000:5
10.1	11.6	13.2	24.0	27.0	27.9	10000:5
10.1	11.6	13.2	30.1	33.0	33.9	10000:5

*Solid Core Models Available - Consult Factory
*Flexible Lead Options Available - Consult Factory

FLEX-CORE®
Div. Morlan & Associates, Inc.
4970 Scioto Darby Rd. Hilliard, Ohio 43026
WWW.FLEX-CORE.COM
sales@flex-core.com
PHONE (614) 889-6152
TECH. ASSISTANCE (614) 876-8308
FAX # (614) 876-8538

CURRENT TRANSFORMERS

SPLIT CORE CURRENT TRANSFORMER *MODEL* SCT-0400

DESCRIPTION

Split core current transformers "sense" AC current from 5 to 75 Amps passing through the window. Split core transformers are ideal for installation on existing electrical wiring by snapping around the conductor. The SCT series have the highest industry standards both for interleaving joints and the self-locking mechanism.

SPECIFICATIONS

- Rated input from 5 Amp to 75 Amp
- **0.333Vac output at rated current**
- Accuracy ±1%
- Accuracy at 10% to 130% of rated current
- Operates from 50Hz to 400Hz
- Phase angle < 2 degrees (valid 20A or higher)
- 8' twisted-pair lead, 22AWG
- Maximum Voltage: 600V (on bare conductor)
- Hinge guaranteed for 500 opening-closing cycles
- UL Recognized
- 0.40" Window I.D.
- Approximately 3 oz.

600V CLASS

c UL us E96927 RoHS COMPLIANT CE



CATALOG NUMBER	INPUT RATING	OUTPUT
SCT-0400-005	5 AMP	0.333Vac
SCT-0400-010	10 AMP	0.333Vac
SCT-0400-015	15 AMP	0.333Vac
SCT-0400-020	20 AMP	0.333Vac
SCT-0400-025	25 AMP	0.333Vac
SCT-0400-030	30 AMP	0.333Vac
SCT-0400-040	40 AMP	0.333Vac
SCT-0400-050	50 AMP	0.333Vac
SCT-0400-060	60 AMP	0.333Vac
SCT-0400-075	75 AMP	0.333Vac

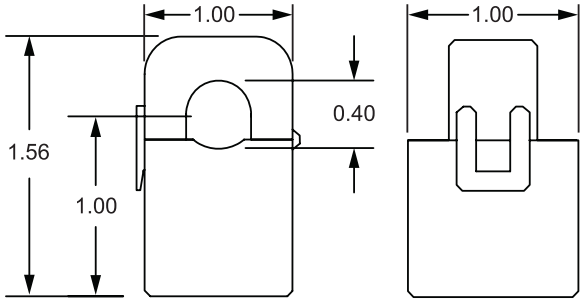

All Dimensions In Inches

SPLIT CORE CURRENT TRANSFORMER *MODEL* SCT-0750

DESCRIPTION

Split core current transformers "sense" AC current from 5 to 200 Amps passing through the window. Split core transformers are ideal for installation on existing electrical wiring by snapping around the conductor. The SCT series have the highest industry standards both for interleaving joints and the self-locking mechanism.

SPECIFICATIONS

- Rated input from 5 Amp to 200 Amp
- **0.333Vac output at rated current**
- Accuracy ±1%
- Accuracy at 10% to 130% of rated current
- Operates from 30Hz to 400Hz
- Phase angle < 2 degrees measured at 50% rated current (valid for 70A or higher)
- 8' twisted-pair lead, 22AWG
- UL Recognized
- 0.75" Window I.D.
- Approximately 4.5 oz.

600V CLASS

c UL us E96927 RoHS COMPLIANT CE



CATALOG NUMBER	INPUT RATING	OUTPUT
SCT-0750-005	5 AMP	0.333Vac
SCT-0750-010	10 AMP	0.333Vac
SCT-0750-030	30 AMP	0.333Vac
SCT-0750-050	50 AMP	0.333Vac
SCT-0750-070	70 AMP	0.333Vac
SCT-0750-100	100 AMP	0.333Vac
SCT-0750-150	150 AMP	0.333Vac
SCT-0750-200	200 AMP	0.333Vac

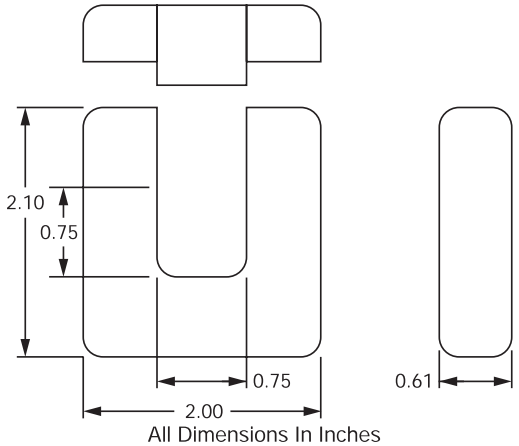

All Dimensions In Inches

FLEX-CORE®
Div. Morlan & Associates, Inc.
4970 Scioto Darby Rd. Hilliard, Ohio 43026

WWW.FLEX-CORE.COM
sales@flex-core.com

PHONE (614) 889-6152
TECH. ASSISTANCE (614) 876-8308
FAX # (614) 876-8538

CURRENT TRANSFORMERS

SPLIT CORE CURRENT TRANSFORMER *MODEL* SCT-1250

DESCRIPTION

Split core current transformers "sense" AC current from 50 to 600 Amps passing through the window. Split core transformers are ideal for installation on existing electrical wiring by snapping around the conductor. The SCT series have the highest industry standards both for interleaving joints and the self-locking mechanism.

SPECIFICATIONS

- Rated input from 50 Amp to 600 Amp
- **0.333Vac output at rated current**
- Accuracy ±1%
- Accuracy at 10% to 130% rated current
- Operates from 50Hz to 400Hz
- Phase angle < 2 degrees measured at 50% rated current
- 8' twisted-pair leads, 22AWG
- UL recognized
- Approximately 11.5 oz.

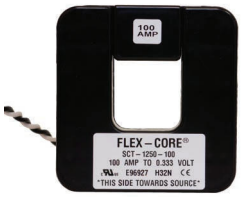

600V CLASS

E96927

CATALOG NUMBER	INPUT RATING	OUTPUT
SCT-1250-070	70 AMP	0.333Vac
SCT-1250-100	100 AMP	0.333Vac
SCT-1250-150	150 AMP	0.333Vac
SCT-1250-200	200 AMP	0.333Vac
SCT-1250-250	250 AMP	0.333Vac
SCT-1250-300	300 AMP	0.333Vac
SCT-1250-400	400 AMP	0.333Vac
SCT-1250-600	600 AMP	0.333Vac

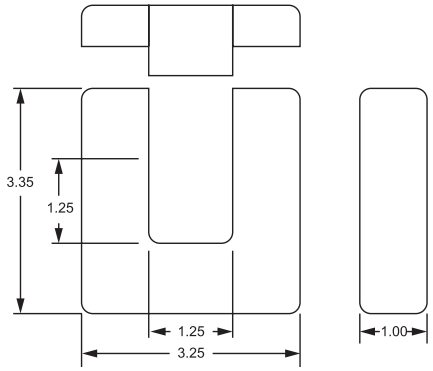

All Dimensions In Inches

SPLIT CORE CURRENT TRANSFORMER *MODEL* SCT-2000

DESCRIPTION

Split core current transformers "sense" AC current from 100 to 1500 Amps passing through the window. Split core transformers are ideal for installation on existing electrical wiring by snapping around the conductor. The SCT series have the highest industry standards both for interleaving joints and the self-locking mechanism.

SPECIFICATIONS

- Rated input from 100 Amp to 1500 Amp
- **0.333Vac output at rated current**
- Accuracy ±1%
- Accuracy at 10% to 130% rated current
- Operates from 50Hz to 400Hz
- Phase angle < 2 degrees measured at 50% rated current
- 8' twisted-pair leads, 22AWG
- UL recognized
- Approximately 1.5 Lbs.



600V CLASS

E96927

CATALOG NUMBER	INPUT RATING	OUTPUT
SCT-2000-100	100 AMP	0.333Vac
SCT-2000-200	200 AMP	0.333Vac
SCT-2000-300	300 AMP	0.333Vac
SCT-2000-400	400 AMP	0.333Vac
SCT-2000-600	600 AMP	0.333Vac
SCT-2000-800	800 AMP	0.333Vac
SCT-2000-1000	1000 AMP	0.333Vac
SCT-2000-1200	1200 AMP	0.333Vac
SCT-2000-1500	1500 AMP	0.333Vac

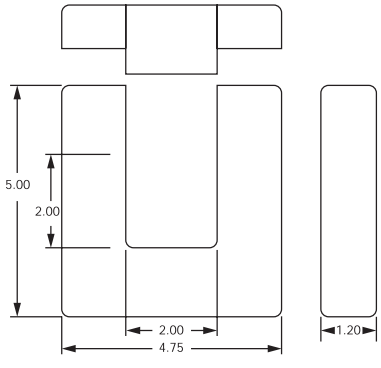

All Dimensions In Inches

FLEX-CORE®
Div. Morlan & Associates, Inc.
4970 Scioto Darby Rd. Hilliard, Ohio 43026
WWW.FLEX-CORE.COM
sales@flex-core.com
PHONE (614) 889-6152
TECH. ASSISTANCE (614) 876-8308
FAX # (614) 876-8538

CURRENT TRANSFORMERS

SPLIT CORE CURRENT TRANSFORMER *MODEL* SCT-3000

DESCRIPTION

Split core current transformers "sense" AC current up to 3000 Amps passing through the window. Split core transformers are ideal for installation on existing electrical wiring by snapping around the conductor. The SCT series have the highest industry standards both for interleaving joints and the self-locking mechanism.

SPECIFICATIONS

- Rated input up to 3000 Amp
- **0.333Vac output at rated current**
- Accuracy ±1%
- Accuracy at 10% to 130% rated current
- Operates from 50Hz to 400Hz
- Phase angle < 2 degrees measured at 50% rated current
- 8' twisted-pair leads, 22AWG
- UL recognized
- Approximately 2.5 Lbs.

600V CLASS

c UL us
E96927

RoHS COMPLIANT

CE



CATALOG NUMBER	INPUT RATING	OUTPUT
SCT-3000-400	400 AMP	0.333Vac
SCT-3000-600	600 AMP	0.333Vac
SCT-3000-800	800 AMP	0.333Vac
SCT-3000-1000	1000 AMP	0.333Vac
SCT-3000-1200	1200 AMP	0.333Vac
SCT-3000-1500	1500 AMP	0.333Vac
SCT-3000-2000	2000 AMP	0.333Vac
SCT-3000-3000	3000 AMP	0.333Vac

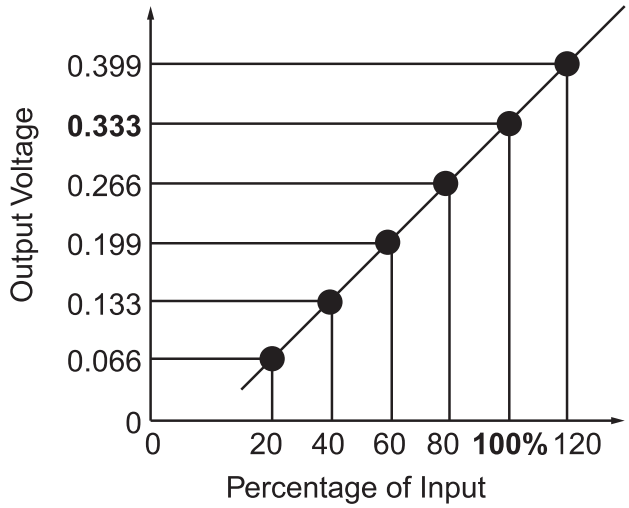

DIMENSIONS

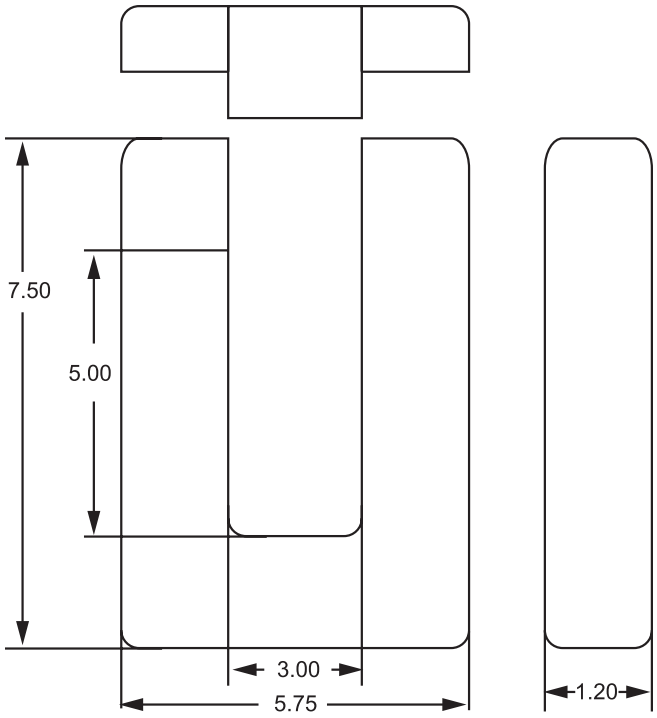

All Dimensions In Inches

FLEX-CORE®
Div. Morlan & Associates, Inc.
4970 Scioto Darby Rd. Hilliard, Ohio 43026

WWW.FLEX-CORE.COM
sales@flex-core.com

PHONE (614) 889-6152
TECH. ASSISTANCE (614) 876-8308
FAX # (614) 876-8538

CURRENT TRANSFORMERS

ROGOWSKI COIL CT — *MODEL* ACP

The ACP Series is an AC current probe using the Rogowski principle. The flexible and lightweight measuring head enables quick and easy installation in hard to reach areas. The ACP is designed for use with hand held multimeters, oscilloscopes, recorders and data loggers.

SPECIFICATIONS

Measuring Ranges ..... 30A/300A/3000A or 60A/600A/6000A
Output Sensitivity..... 100mV/10mV/1mV/A or 50mV/5mV/0.5mV(AC coupled)
Accuracy (45-65Hz)..... ± 1% of range
Frequency Range ..... 10Hz to 10kHz
Phase Error ..... ± 1° (45 to 65Hz)
Minimum Load ..... 100KΩ for specified accuracy
Operating Temperature..... -20°C to +65°C(-4°F to +149°F) Electronics
Storage Temperature ..... -40°C to +75°C(-40°F to +167°F) Electronics
Common Mode Voltage ..... Voltage between the Output and Earth must not exceed 30V
Power Supply.....2 x AA MN1500 (1.5V) LR6 batteries
or external power supply (+3V DC/100mA) via battery eliminator,2.1mm connector
Battery Life .....2000 Hours Typical
Low Battery Indication ..... Orange LED
Safety .....EN 61010-2-032:2002
$1000V_{rms}$, CAT III, Pol. Deg 2
EMC Standard.....EN 61326-2-212006
Enclosure..... Flame retardant UL94-V0 rated
Material.....Alcryn 2070 NC Double Insulated
Output Connections.....Safety BNC female connector
External Power ..... Via socket on enclosure
Weight ..... 0.5kg (0.9 Lb.)

Measuring Head

Probe Length..... 610mm (24"), double insulated
915mm (36"), double insulated
1220mm (48"), double insulated
Probe I.D. (Closed) ..... 7.0" (24" Length)
10.9" (36" Length)
14.7" (48" Length)
Probe Cross Section..... 9.9mm (0.39")
Connecting Cable .....2m (78.7") long, Probe to Integrator
Material..... LATI LATENE 7H2W V0



Model ACP



Optional 3V Power Supply
Model STA-4130



3 Phase Model Available - Consult Factory for Details

ORDERING INFORMATION

CATALOG NUMBER	RANGE	OUTPUT	HEAD SIZE
ACP3000-3/24 ACP3000-3/36 ACP3000-3/48	30-300-3000A	3Vac	24" 36" 48"
ACP6000-3/24 ACP6000-3/36 ACP6000-3/48	60-600-6000A	3Vac	24" 36" 48"

E323132

DIMENSIONS

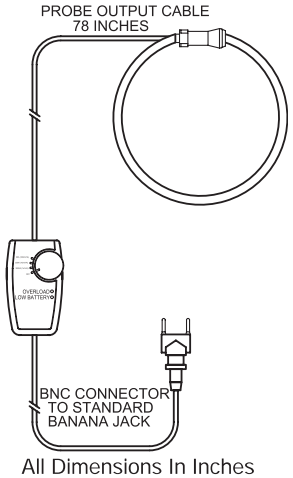

All Dimensions In Inches

FLEX-CORE®
Div. Morlan & Associates, Inc.
4970 Scioto Darby Rd. Hilliard, Ohio 43026
WWW.FLEX-CORE.COM
sales@flex-core.com
PHONE (614) 889-6152
TECH. ASSISTANCE (614) 876-8308
FAX # (614) 876-8538

CURRENT TRANSFORMERS

ROGOWSKI COIL CT — *MODELS* RCS-1800, RCT-1800

DESCRIPTION

The RCS-1800 & RCT-1800 series are AC current probes using the Rogowski principle to measure AC current rated from 250 to 5,000 Amps for single and three phase electrical applications. The coils open at the connector junction and can be installed on an existing cable or buss-bar easily in a matter of seconds. The RCS-1800 & RCT-1800 are designed for use with hand held multimeters, oscilloscopes, recorders, and data loggers.

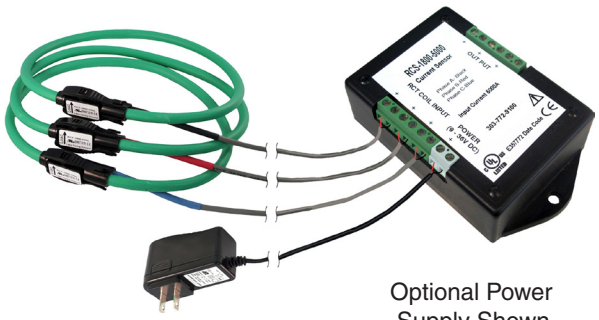

MODEL RCS
(Three Phase)

Optional Power
Supply Shown

SPECIFICATIONS

- Maximum voltage = 600V
- Input from 250 to 5,000 Amps
- Output 0.333V at rated current
- Accuracy ±1%
- Phase angle < 0.5 degrees
- Rated accuracy at 10% to 300% rated current
- Coil Length 18" (5.73" Diameter)
- 8' twisted pair sensor output leads (600V), 24AWG
- Torque rating for all terminals is 2.1 inch pounds
- Terminal block suitable for wire guages up to 16AWG
- Power supply required, not included
  RCT & RCS = 9-36Vdc
  Order Part #: RCS/RCT Power Supply
- Weight
  RCS ..... 2 Lbs.
  RCT ..... 6.5 oz.

600V CLASS

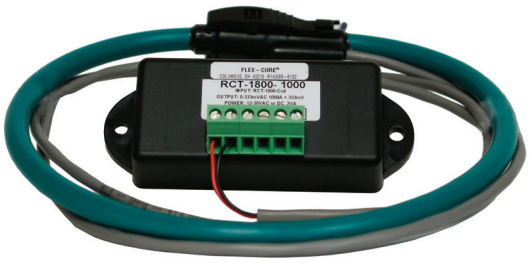

MODEL RCT
(Single Phase)

ORDERING INFORMATION		
THREE PHASE	SINGLE PHASE	RATING
RCS-1800-0250	RCT-1800-0250	250 Amps
RCS-1800-0500	RCT-1800-0500	500 Amps
RCS-1800-1000	RCT-1800-1000	1000 Amps
RCS-1800-2000	RCT-1800-2000	2000 Amps
RCS-1800-3000	RCT-1800-3000	3000 Amps
RCS-1800-4000	RCT-1800-4000	4000 Amps
RCS-1800-5000	RCT-1800-5000	5000 Amps

E96927

RCS-1800 INTEGRATOR RCT-1800

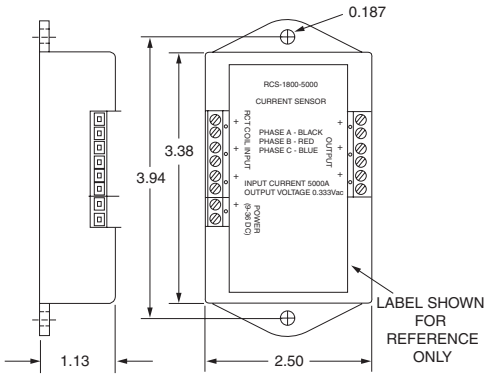

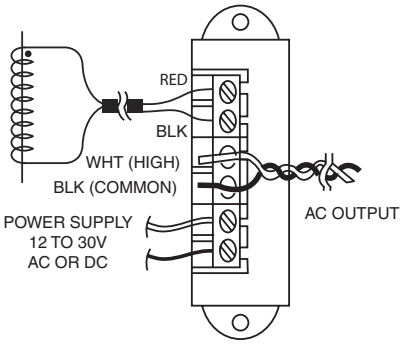

RCS & RCT DIMENSIONS

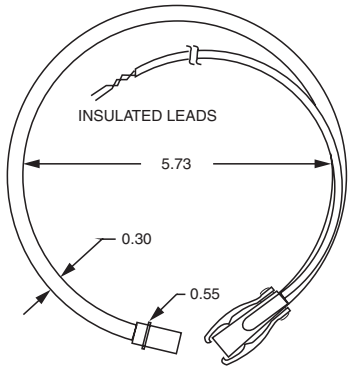

All Dimensions In Inches

FLEX-CORE®
Div. Morlan & Associates, Inc.
4970 Scioto Darby Rd. Hilliard, Ohio 43026
WWW.FLEX-CORE.COM
sales@flex-core.com
PHONE (614) 889-6152
TECH. ASSISTANCE (614) 876-8308
FAX # (614) 876-8538

CURRENT TRANSFORMERS

AC CURRENT MICROCLAMP — *MODELS* M1, M2

SPECIFICATIONS

Accuracy Class 1%
Operating Voltage ..... M1 640 Volts Max.
M2 650 Volts Max.
Isolation Test ..... 4kV - 1 Minute
Current Rating ..... Full Scale - Continuous
100% Over Range - 3 Minutes
Temperature ..... -10°C to +50°C
Cable Size ..... 0.59"
Dimensions ..... M1 ..... 3.8" x 1.69" x 0.9"
M2 ..... 4.5" x 1.69" x 0.9"
Weight ..... M1 ..... 0.25 Lb.
M2 ..... 0.37 Lb.
Output Terminals ..... 4mm Safety Terminals
Color
Current Output. M1 ..... Gray
Voltage Output. M1 ..... Blue
M2 ..... Blue
Special Cables and Connectors are Available.

FEATURES

- Meets IEC Standard 348 Class II



600V CLASS

M1 APPLICATION AND ORDERING DATA							
CATALOG NUMBER	CURRENT RANGE	OUTPUT	MAX CURRENT	LOAD (Ω)	PHASE (Deg.)	FREQUENCY RANGE (Hz)	
						FOR 3%	FOR -3db
AC MICRO CLAMPS WITH AC VOLTAGE OUTPUT							
M1V-1-1	5mA to 1Aac	1Vac	10A	>300K	4.0	40 to 2,000	30 to 40,000
M1V-5-1	20mA to 5Aac	1Vac	50A	>100K	3.0	40 to 2,000	30 to 40,000
M1V-5-2	20mA to 5Aac	2Vac	25A	>150K	3.5	40 to 2,000	30 to 40,000
M1V-10-1	50mA to 10Aac	1Vac	100A	>30K	2.5	40 to 2,000	30 to 40,000
M1V-10-2	25mA to 10Aac	2Vac	50A	>100K	3.0	40 to 2,000	30 to 40,000
M1V-10-5	10mA to 10Aac	5Vac	200A	>200K	2.0	40 to 2,000	30 to 40,000
M1V-20-1	100mA to 20Aac	1Vac	100A	>10K	2.0	40 to 2,000	30 to 40,000
M1V-20-2	50mA to 20Aac	2Vac	100A	>30K	2.5	40 to 2,000	30 to 40,000
M1V-20-5	20mA to 20Aac	5Vac	40A	>150K	3.0	40 to 2,000	30 to 40,000
M1V-50-1	200mA to 50Aac	1Vac	200A	>5K	1.5	40 to 2,000	30 to 40,000
M1V-50-2	100mA to 50Aac	2Vac	200A	>10K	2.0	40 to 2,000	30 to 40,000
M1V-50-5	50mA to 50Aac	5Vac	100A	>30K	2.5	40 to 2,000	30 to 40,000
M1V-100-1	50mA to 100Aac	1Vac	200A	>50K	3.0	40 to 2,000	30 to 40,000
M1V-100-5	50mA to 100Aac	5Vac	150A	>50K	3.0	40 to 2,000	30 to 40,000
M1V-200-1	100mA to 200Aac	1Vac	300A	>50K	3.0	40 to 2,000	30 to 40,000
M1V-200-2	100mA to 200Aac	2Vac	300A	>100K	3.0	40 to 2,000	30 to 40,000
M1V-200-5	100mA to 200Aac	5Vac	300A	>200K	3.0	40 to 2,000	30 to 40,000
AC MICRO CLAMPS WITH AC CURRENT OUTPUT							
M1-100-1	50mA to 100Aac	1Aac	200A	0.1 to 0.5	1.5 to 2.5	40 to 2,000	30 to 40,000
M1-200-0.1	100mA to 200Aac	0.1Aac	300A	0.1 to 10	1.5 to 2.5	40 to 2,000	30 to 40,000
M1-200-0.2	100mA to 200Aac	0.2Aac	300A	0.1 to 5.0	1.5 to 2.5	40 to 2,000	30 to 40,000
M1-200-1	100mA to 200Aac	1Aac	300A	0.1 to 0.5	1.5 to 2.5	40 to 2,000	30 to 40,000
M2 APPLICATION AND ORDERING DATA							
CATALOG NUMBER	CURRENT RANGE	OUTPUT	MAX CURRENT	LOAD (Ω)	PHASE (Deg.)	FREQUENCY RANGE (Hz)	
						FOR 3%	FOR -3db
AC MICRO CLAMPS WITH DC VOLTAGE OUTPUT							
M2V-25-1DC	0.5 to 25Aac	1Vdc	50Aac	>50K	N/A	40 to 2,000	30 to 40,000
M2V-100-1DC	5 to 100Aac	1Vdc	200Aac	>20K	N/A	40 to 2,000	30 to 40,000
M2V-200-1DC	10 to 200Aac	1Vdc	200Aac	>20K	N/A	40 to 2,000	30 to 40,000
M2V-200-2DC	10 to 200Aac	2Vdc	300Aac	>10K	N/A	40 to 2,000	30 to 40,000
TRIPLE-RANGE AC MICRO CLAMP WITH AC VOLTAGE OUTPUT							
M2V-3-200-1	50-100-200Aac	1Vac	300Aac	>10K	3.0	40 to 2,000	30 to 40,000

DIMENSIONS

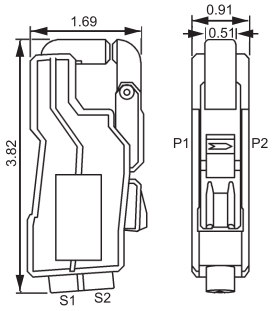

Model M1

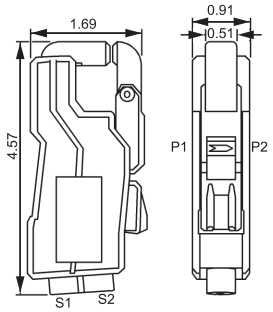

Model M2

All Dimensions In Inches

FLEX-CORE®
Div. Morlan & Associates, Inc.
4970 Scioto Darby Rd. Hilliard, Ohio 43026
WWW.FLEX-CORE.COM
sales@flex-core.com
PHONE (614) 889-6152
TECH. ASSISTANCE (614) 876-8308
FAX # (614) 876-8538

CURRENT TRANSFORMERS

AC CURRENT CLAMP — *MODEL* NS

FEATURES

- Meets IEC Standard 348 Class II

600V CLASS



SPECIFICATIONS

Accuracy Class.....1%
Operating Voltage.....600 Volts Max.
Isolation Test.....4kV - 1 Minute
Current Rating.....Full Scale - Continuous
100% Over Range - 3 Minutes
Temperature.....-10°C to +50°C
Weight..... 1 to 1.25 lbs.
Output Terminals..... 4MM Safety Terminals
Cable - optional
Cable Opening..... 2.0"
Bus Bar Opening..... 2.0" x 0.5"
Dimensions..... 8.1" x 3.5" x 1.6"
Color
Current Output..... Gray
Voltage Output.....Blue
Special cables and connectors are available.

DIMENSIONS

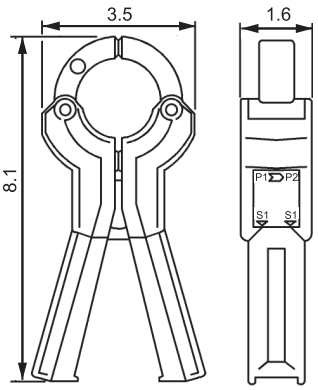

All Dimensions In Inches

APPLICATION AND ORDERING DATA

CATALOG NUMBER	PRIMARY CURRENT	OUTPUT	MAX CURRENT	LOAD (Ω)	PHASE (Deg)	FREQUENCY RANGE (Hz)	
						FOR 3%	FOR -3db
AC CLAMPS WITH VOLTAGE OUTPUT							
NSVE-100-1	0.1-100Aac	1Vac	150A	>20K	1.0 to 1.5	40-5,000	30-10,000
NSVE-200-1	0.2-200Aac	1Vac	300A	>20K	0.5 to 1.0	40-5,000	30-10,000
NSVE-250-1	0.25-250Aac	1Vac	300A	>20K	1.0 to 1.5	40-5,000	30-10,000
NSVE-500-1	0.5-500Aac	1Vac	750A	>20K	0.5 to 1.0	40-5,000	30-10,000
NSVE-500-5	0.5-500Aac	5Vac	750A	>20K	1.0 to 1.5	40-5,000	30-10,000
NSVE-1000-1	1-1000Aac	1Vac	1500A	>20K	0.25 to 1.0	40-5,000	30-10,000
NSVE-3-100-1	25-50-100Aac	1Vac	150A	>20K	1.0 to 1.5	40-5,000	30-10,000
NSVE-3-1000-1	250-500-1000Aac	1Vac	1500A	>20K	0.25 to 1.0	40-5,000	30-10,000
AC CLAMPS WITH CURRENT OUTPUT							
NS-100-1	0.1-100Aac	1Aac	150A	0.1-1	1.0 to 1.5	40-5,000	30-10,000
NS-200-1	0.2-200Aac	1Aac	300A	0.1-2	0.5 to 1.0	40-5,000	30-10,000
NS-200-5	0.2-200Aac	5Aac	300A	0.1	1.5 to 2.5	40-5,000	30-10,000
NS-500-1	0.5-500Aac	1Aac	750A	0.1-5	0.25 to 0.75	40-5,000	30-10,000
NS-500-5	0.5-500Aac	5Aac	750A	0.1.	1.0 to 1.5	40-5,000	30-10,000
NS-1000-1	1-1000Aac	1Aac	1500A	0.1-10	0.25 to 0.75	40-5,000	30-10,000
NS-1000-5	1-1000Aac	5Aac	1500A	0.1	0.5 to 1.0	40-5,000	30-10,000
NS-3-400-1	100-200-400Aac	1Aac	600A	0.1-5	0.5 to 1.0	40-5,000	30-10,000
NS-3-600-1	150-300-600Aac	1Aac	900A	0.1-5	0.25 to 0.75	40-5,000	30-10,000
NS-3-600-5	150-300-600Aac	5Aac	900A	0.1	1.0 to 3.0	40-5,000	30-10,000
NS-3-1000-1	250-500-1000Aac	1Aac	1500A	0.1-10	0.25 to 0.75	40-5,000	30-10,000
NS-3-1000-5	250-500-1000Aac	5Aac	1500A	0.1	1.0 to 2.5	40-5,000	30-10,000

FLEX-CORE®
Div. Morlan & Associates, Inc.
4970 Scioto Darby Rd. Hilliard, Ohio 43026
WWW.FLEX-CORE.COM
sales@flex-core.com
PHONE (614) 889-6152
TECH. ASSISTANCE (614) 876-8308
FAX # (614) 876-8538

CURRENT TRANSFORMERS

AC CURRENT CLAMP — *MODELS* H32, P32

SPECIFICATIONS

Accuracy Class 1%
Operating Voltage ..... 600 Volts Max.
Isolation Test ..... 5.55kV - 1 Minute
Current Rating ..... Full Scale - Continuous
100% Over Range - 3 Minutes
Temperature ..... -10°C to +50°C
Weight ..... 3.5 lbs.
Output Terminals ..... 4mm Safety Terminals
Cable - optional
Cable Size ..... ***H32*** 2.76" ..... ***P32*** 3.27"
Bus Bar Size ..... H32 ..... 5.0" x 1.3" or 4.0" x 1.8"
P32 ..... 5.0" x 1.8" or 4.0" x 2.25"
Dimensions ..... H32 ..... 5.2" x 13.11" x 2.05"
P32 ..... 5.83" x 13.11" x 2.05"
Color ..... Current Output ..... Gray
Voltage Output ..... Blue
Special Cables and Connectors are Available.

FEATURES

- Meets IEC Standard 348 Class II

600V CLASS



H32 APPLICATION AND ORDERING DATA							
CATALOG NUMBER	CURRENT RANGE	OUTPUT	MAX CURRENT	LOAD (Ω)	PHASE (DEG.)	FREQUENCY RANGE (Hz) FOR 3%	FOR -3DB
AC CLAMPS WITH AC VOLTAGE OUTPUT							
H32VE-1000-1	1 - 1000Aac	1Vac	1500A	>20K	0.25 to 1.0	40-2000	30-5000
H32V-1000-5	1 - 1000Aac	5Vac	1500A	>20K	0.5 to 1.0	40-2000	30-5000
H32VE-2000-1	2 - 2000Aac	1Vac	3000A	>20K	0.25 to 1.0	40-2000	30-5000
H32VE-2000-2	2 - 2000Aac	2Vac	3000A	>20K	0.5 to 1.0	40-2000	30-5000
H32V-2000-5	2 - 2000Aac	5Vac	3000A	>20K	0.5 to 1.0	40-2000	30-5000
H32VE-3000-1	3 - 3000Aac	1Vac	4500A	>20K	0.5 to 1.0	40-2000	30-5000
H32V-3000-3	3 - 3000Aac	3Vac	4500A	>20K	0.5 to 1.0	40-2000	30-5000
H32V-3000-5	3 - 3000Aac	5Vac	4500A	>20K	0.5 to 1.0	40-2000	30-5000
H32V-330-1	1000,2000,3000Aac	1Vac	4500A	>20K	0.5 to 1.0	40-2000	30-5000
H32V-330-5	1000,2000,3000Aac	5Vac	4500A	>20K	0.5 to 1.0	40-2000	30-5000
AC CLAMPS WITH AC CURRENT OUTPUT							
H32-1000-1	1 - 1000Aac	1Aac	1500A	0.01 - 4	0.25 to 1.0	40-2000	30-5000
H32-1000-5	1 - 1000Aac	5Aac	1500A	0.01 - 4	0.5 to 1.0	40-2000	30-5000
H32-2000-1	2 - 2000Aac	1Aac	3000A	0.01 - 4	0.25 to 1.0	40-2000	30-5000
H32-2000-2	2 - 2000Aac	2Aac	3000A	0.01 - 4	0.25 to 1.0	40-2000	30-5000
H32-2000-5	2 - 2000Aac	5Aac	3000A	0.01 - 4	0.5 to 1.0	40-2000	30-5000
H32-3000-1	3 - 3000Aac	1Aac	4500A	0.01 - 4	0.25 to 1.5	40-2000	30-5000
H32-3000-3	3 - 3000Aac	3Aac	4500A	0.01 - 4	0.5 to 1.0	40-2000	30-5000
H32-3000-5	3 - 3000Aac	5Aac	4500A	0.01 - 4	0.5 to 1.0	40-2000	30-5000
H32-330-1	1000,2000,3000Aac	1Aac	4500A	0.01 - 4	0.25 to 1.0	40-2000	30-5000
H32-330-5	1000,2000,3000Aac	5Aac	4500A	0.01 - 4	0.5 to 1.0	40-2000	30-5000

P32 APPLICATION AND ORDERING DATA							
CATALOG NUMBER	Current Range	OUTPUT	MAX CURRENT	LOAD (Ω)	PHASE (DEG.)	FREQUENCY RANGE (Hz) FOR 3%	FOR -3db
AC CLAMPS WITH AC VOLTAGE OUTPUT							
P32VE-1000-1	1 - 1000Aac	1Vac	1500A	>20K	0.25 to 1.0	40-2000	30-5000
P32V-1000-5	1 - 1000Aac	5Vac	1500A	>20K	0.5 to 1.0	40-2000	30-5000
P32VE-2000-1	2 - 2000Aac	1Vac	3000A	>20K	0.25 to 1.0	40-2000	30-5000
P32VE-2000-2	2 - 2000Aac	2Vac	3000A	>20K	0.5 to 1.0	40-2000	30-5000
P32V-2000-5	2 - 2000Aac	5Vac	3000A	>20K	0.5 to 1.0	40-2000	30-5000
P32VE-3000-1	3 - 3000Aac	1Vac	4500A	>20K	0.5 to 1.0	40-2000	30-5000
P32V-3000-3	3 - 3000Aac	3Vac	4500A	>20K	0.5 to 1.0	40-2000	30-5000
P32V-3000-5	3 - 3000Aac	5Vac	4500A	>20K	0.5 to 1.0	40-2000	30-5000
P32V-330-1	1000,2000,3000Aac	1Vac	4500A	>20K	0.25 to 1.5	40-2000	30-5000
P32V-330-5	1000,2000,3000Aac	5Vac	4500A	>20K	0.5 to 1.0	40-2000	30-5000
AC CLAMPS WITH AC CURRENT OUTPUT							
P32-1000-1	1 - 1000Aac	1Aac	1500A	0.01 - 4	0.25 to 1.0	40-2000	30-5000
P32-1000-5	1 - 1000Aac	5Aac	1500A	0.01 - 4	0.5 to 1.0	40-2000	30-5000
P32-2000-1	2 - 2000Aac	1Aac	3000A	0.01 - 4	0.25 to 1.0	40-2000	30-5000
P32-2000-2	2 - 2000Aac	2Aac	3000A	0.01 - 4	0.25 to 1.0	40-2000	30-5000
P32-2000-5	2 - 2000Aac	5Aac	3000A	0.01 - 4	0.5 to 1.0	40-2000	30-5000
P32-3000-1	3 - 3000Aac	1Aac	4500A	0.01 - 4	0.25 to 1.0	40-2000	30-5000
P32-3000-3	3 - 3000Aac	3Aac	4500A	0.01 - 4	0.5 to 1.0	40-2000	30-5000
P32-3000-5	3 - 3000Aac	5Aac	4500A	0.01 - 4	0.5 to 1.0	40-2000	30-5000
P32-330-1	1000,2000,3000Aac	1Aac	4500A	0.01 - 4	0.25 to 1.0	40-2000	30-5000
P32-330-5	1000,2000,3000Aac	5Aac	4500A	0.01 - 4	0.5 to 1.0	40-2000	30-5000

DIMENSIONS

MODEL H32

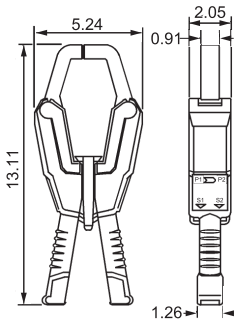

MODEL P32

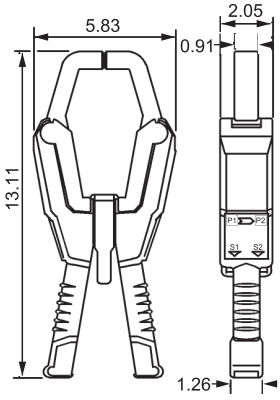

All Dimensions In Inches

FLEX-CORE®
Div. Morlan & Associates, Inc.
4970 Scioto Darby Rd. Hilliard, Ohio 43026
WWW.FLEX-CORE.COM
sales@flex-core.com
PHONE (614) 889-6152
TECH. ASSISTANCE (614) 876-8308
FAX # (614) 876-8538

CURRENT TRANSFORMERS

ACCESSORIES FOR AC CURRENT MICRO CLAMPS & CLAMP-ON CT'S

MODEL TMP15124C

c UL us LISTED UL-508

CE

c UL us 60950-1



CONNECTIONS		
	15124C	15215C
1	AC (N)	AC (N)
2	AC (L)	AC (L)
3	N/C	N/C
4	-24V	-15V
5	N/C	COM.1/2
6	+24V	+15V
7	N/C	N/C

SPECIFICATIONS

24Vdc Power Supply
Input..... 85-264Vac, 47-440Hz
Output..... 24Vdc
Output Rating 625mA
Terminals ..... 16-22 AWG
Weight ..... Approximately 0.36 Lb.
Dimensions..... 3.78"H X 2.13"W X 0.92"D
Optional DIN Rail Mounting Kit.....P/N TMP-MK1

MODEL TMP15215C

CE

c UL us LISTED UL-508

c UL us 60950-1



SPECIFICATIONS

±15Vdc Power Supply
Input..... 85-264Vac, 47-440Hz
Output..... ±15Vdc
Output Rating 500mA
Terminals ..... 16-22 AWG
Weight ..... Approximately 0.36 Lb.
Dimensions..... 3.78"L X 2.13"W X 0.92"D

CLAMP CABLES WITH RETRACTABLE SHEATHS

MALE-MALE CABLES

MMR-36-SH..... 36" RED
MMB-36-SH..... 36" BLACK
MMR-48-SH..... 48" RED
MMB-48-SH..... 48" BLACK

MALE-FEMALE CABLES

MFR-36-SH ..... 36" RED
MFB-36-SH..... 36" BLACK
MFR-48-SH ..... 48" RED
MFB-48-SH..... 48" BLACK

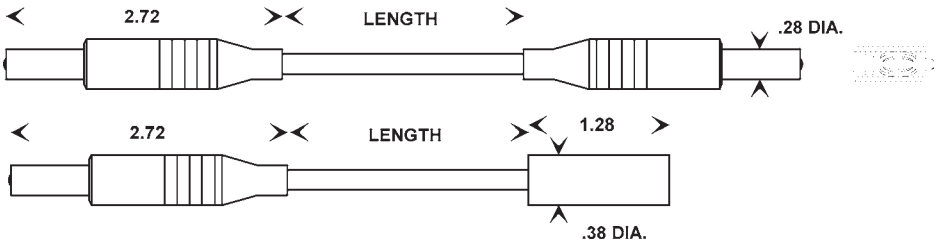

SPECIAL CABLES

A wide range of custom cables are available for use with current clamps. These can be integrated into the clamp handle and terminated with a connector that is specified by the customer.

FLEX-CORE®
Div. Morlan & Associates, Inc.
4970 Scioto Darby Rd. Hilliard, Ohio 43026
WWW.FLEX-CORE.COM
sales@flex-core.com
PHONE (614) 889-6152
TECH. ASSISTANCE (614) 876-8308
FAX # (614) 876-8538

CURRENT TRANSFORMERS

SOLID CORE CURRENT TRANSFORMER — MODEL 2RL

FEATURES

- UL Recognized
- Window I.D. - 1.05"
- Use with Ammeters

600V CLASS

c UL us E238872 — CSA 245941

MADE IN U.S.A.

RoHS COMPLIANT



SPECIFICATIONS

Frequency 50-400Hz
Insulation Class ..... 0.6kV, 10kV BIL Full Wave
Flexible Leads .... UL1015, 105°C, CSA approved, 16 AWG, 24"
Weight ..... Approximately 0.5 Lb.

APPLICATION AND ORDERING DATA			
CATALOG NUMBER	CURRENT RATIO	ACCURACY AT 60Hz	BURDEN VA AT 60Hz
2RL-500	50:5	±3%	2.0
2RL-600	60:5	±2%	2.0
2RL-750	75:5	±2%	2.0
2RL-800	80:5	±2%	2.0
2RL-101	100:5	±1%	2.0
2RL-121	120:5	±1%	2.5
2RL-1250	125:5	±1%	2.5
2RL-151	150:5	±1%	4.0
2RL-201	200:5	±1%	4.0
2RL-251	250:5	±1%	6.0
2RL-301	300:5	±1%	8.0
2RL-401	400:5	±1%	10.0

DIMENSIONS

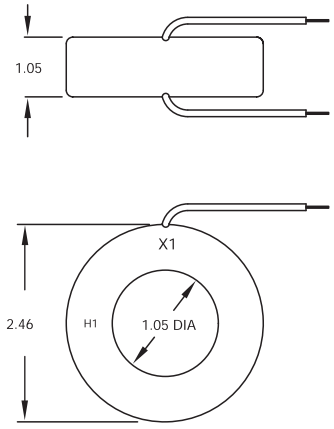

All Dimensions In Inches

SOLID CORE CURRENT TRANSFORMER — MODEL 7RL

FEATURES

- UL Recognized
- Window I.D. - 2.50"
- Use with Ammeters and Watt Meters

600V CLASS

c UL us E238872 — CSA 245941

MADE IN U.S.A.

RoHS COMPLIANT



SPECIFICATIONS

Frequency 50-400Hz
Insulation Class ..... 0.6kV, 10kV BIL Full Wave
Flexible Leads ..... UL1015,105°C, CSA approved, 16 AWG, 24"
Weight ..... Approximately 1.5 Lbs.

APPLICATION AND ORDERING DATA			
CATALOG NUMBER	CURRENT RATIO	ACCURACY AT 60Hz	BURDEN VA AT 60Hz
7RL-301	300:5	±1%	12.5
7RL-401	400:5	±1%	15.0
7RL-501	500:5	±1%	25.0
7RL-601	600:5	±1%	30.0
7RL-751	750:5	±1%	30.0
7RL-801	800:5	±1%	35.0
7RL-102	1000:5	±1%	35.0
7RL-122	1200:5	±1%	35.0
7RL-152	1500:5	±1%	40.0
7RL-162	1600:5	±1%	45.0

DIMENSIONS

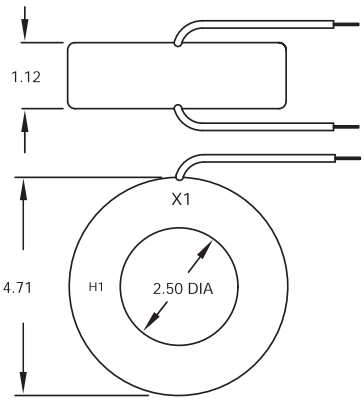

All Dimensions In Inches

FLEX-CORE®
Div. Morlan & Associates, Inc.
4970 Scioto Darby Rd. Hilliard, Ohio 43026

WWW.FLEX-CORE.COM
sales@flex-core.com

PHONE (614) 889-6152
TECH. ASSISTANCE (614) 876-8308
FAX # (614) 876-8538

CURRENT TRANSFORMERS

SOLID CORE CURRENT TRANSFORMER — MODEL 2SFT

FEATURES

- UL Recognized
- Window I.D. - 1.13"
- Use with Ammeters

600V CLASS

c UL us E238872 CSA 245941

RoHS COMPLIANT

MADE IN U.S.A.



SPECIFICATIONS

Frequency 50-400Hz
Insulation Class ..... 0.6kV, 10kV BIL Full Wave
Rating Factor ..... 1.0@30°C
Weight ..... Approximately 0.5 Lb.
Terminals ..... Brass Studs No. 8-32 UNC with one flat washer, lock washer and regular nut.

APPLICATION AND ORDERING DATA

CATALOG NUMBER	CURRENT RATIO	ACCURACY AT 60 Hz	BURDEN VA AT 60 Hz
2SFT-500	50:5	± 3%	2.0
2SFT-600	60:5	± 2%	2.0
2SFT-750	75:5	± 2%	2.0
2SFT-800	80:5	± 2%	2.0
2SFT-101	100:5	± 1%	2.0
2SFT-151	150:5	± 1%	4.0
2SFT-201	200:5	± 1%	4.0
2SFT-301	300:5	± 1%	8.0
2SFT-401	400:5	± 1%	10.0

MODEL 2SFT DIMENSIONS

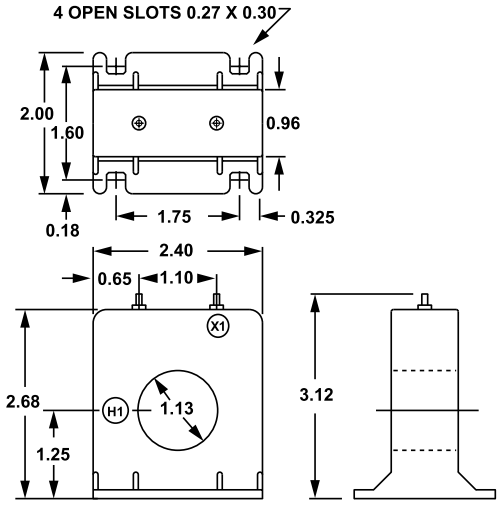

All Dimensions In Inches

SOLID CORE CURRENT TRANSFORMER — MODEL 5SFT

FEATURES

- UL Recognized
- Window I.D. - 1.56"
- Use with Ammeters, Watt Meters and cross current compensation

600V CLASS

c UL us E238872 CSA 245941

RoHS COMPLIANT

MADE IN U.S.A.



SPECIFICATIONS

Frequency 50-400Hz
Insulation Class ..... 0.6kV, 10kV BIL Full Wave
Weight ..... Approximately 1.0 Lb.
Terminals ..... Brass Studs No. 8-32 UNC with one flat washer, lock washer and regular nut.

APPLICATION AND ORDERING DATA

CATALOG NUMBER	CURRENT RATIO	ACCURACY AT 60 Hz	BURDEN VA AT 60 Hz
5SFT-101	100:5	± 1%	2.0
5SFT-151	150:5	± 1%	5.0
5SFT-201	200:5	± 1%	5.0
5SFT-251	250:5	± 1%	10.0
5SFT-301	300:5	± 1%	12.5
5SFT-401	400:5	± 1%	12.5
5SFT-501	500:5	± 1%	20.0
5SFT-601	600:5	± 1%	25.0

MODEL 5SFT DIMENSIONS

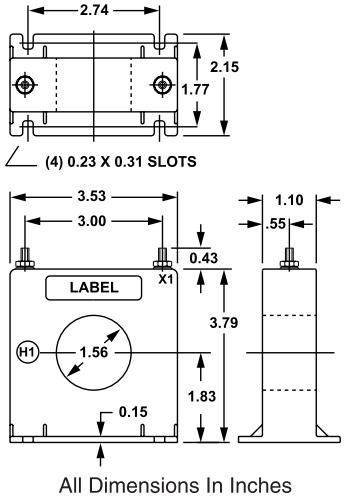

All Dimensions In Inches

FLEX-CORE®
Div. Morlan & Associates, Inc.
4970 Scioto Darby Rd. Hilliard, Ohio 43026

WWW.FLEX-CORE.COM
sales@flex-core.com

PHONE (614) 889-6152
TECH. ASSISTANCE (614) 876-8308
FAX # (614) 876-8538

CURRENT TRANSFORMERS

SOLID CORE CURRENT TRANSFORMER *MODELS* 58RBL, 7RBL, 76RBL

600V CLASS

FEATURES

- Flexible leads are UL1015 105ºC CSA approved.
- Mounting brackets installed.

APPLICATIONS

- For use with Watt and Watt/Watt Hour transducers or meters.
- Ideal for use with Ammeters and Current Transducers.

SPECIFICATIONS

Frequency..... 50 to 400Hz
Insulation Class .....0.6kV, 10kV BIL Full Wave
Leads..... UL1015 105°C CSA approved, 16 AWG, 24"

®238872 ®245941
All models on this page UL recognized

RoHS COMPLIANT
MADE IN U.S.A.

CATALOG NUMBER	CURRENT RATIO	ACCURACY AT 60Hz (%)	BURDEN AT 60Hz (VA)	WT. (LBS)	CONTINUOUS RATING FACTOR @ 30°C
58RBL-500	50:5	3.0	1.5	1.22	2.00
58RBL-101	100:5	1.5	5.0	1.28	2.00
58RBL-151	150:5	1.0	7.5	1.35	1.50
58RBL-201	200:5	1.0	12.5	1.37	1.50
58RBL-251	250:5	1.0	12.5	1.39	2.00
58RBL-301	300:5	1.0	15.0	1.41	2.00
7RBL-401	400:5	1.0	15.0	1.47	2.00
7RBL-501	500:5	1.0	25.0	1.53	2.00
7RBL-601	600:5	1.0	30.0	1.59	1.50
7RBL-801	800:5	1.0	35.0	1.61	1.33
76RBL-102	1000:5	1.0	10.0	0.65	1.00
76RBL-122	1200:5	1.0	10.0	0.73	1.00
76RBL-152	1500:5	1.0	12.5	0.86	1.00
76RBL-202	2000:5	1.0	15.0	1.10	1.00

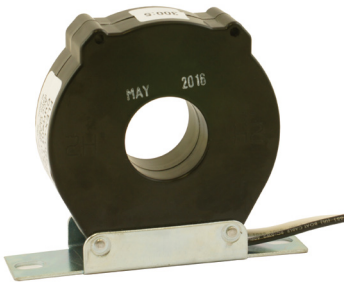



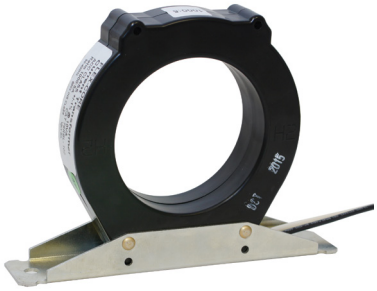

MODEL 58RBL

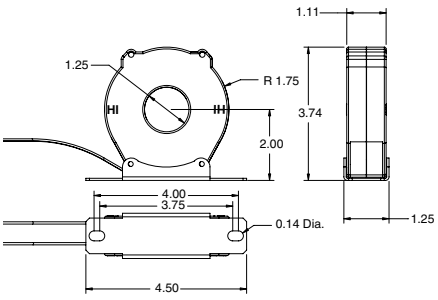

MODEL 7RBL

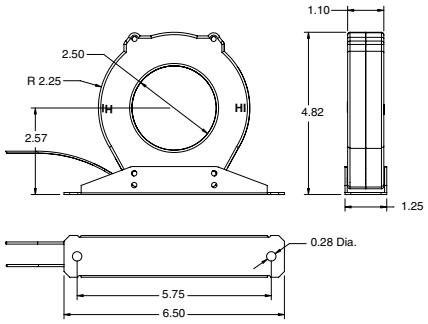

MODEL 76RBL

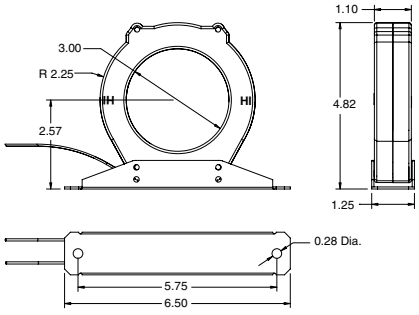

All Dimensions In Inches

FLEX-CORE®
Div. Morlan & Associates, Inc.
4970 Scioto Darby Rd. Hilliard, Ohio 43026
WWW.FLEX-CORE.COM
sales@flex-core.com
PHONE (614) 889-6152
TECH. ASSISTANCE (614) 876-8308
FAX # (614) 876-8538

CURRENT TRANSFORMERS

METERING CLASS CURRENT TRANSFORMER *MODEL* 2DARL

FEATURES

- Revenue Metering Applications
- UL Recognized
- Window I.D. - 1.00"
- For use with long runs of secondary wiring

600V CLASS

c UL us E238872 SA® 245941

RoHS COMPLIANT

MADE IN U.S.A.



SPECIFICATIONS

Frequency 50-400Hz
Insulation class ..... 0.6kV, 10kV BIL Full Wave
Leads ..... 16 AWG, 24" long, UL105°C
Weight ..... Approximately 0.9 Lb.
Rating Factor ..... 50:5-150:5 ..... 2.0 @ 30°C
200:5-300:5 ..... 1.5 @ 30°C

Manufactured to meet the requirements of ANSI/IEEE C57.13

APPLICATION AND ORDERING DATA						
CATALOG NUMBER	CURRENT RATIO	V.A. FOR ±1% CLASS	ANSI METERING CLASS AT 60Hz			SECONDARY WINDING RESISTANCE (Ω@75°C)
			B0.1	B0.2	B0.5	
2DARL-500	50:5	2.5	4.8	-	-	0.008
2DARL-600	60:5	2.5	1.2	4.8	-	0.011
2DARL-750	75:5	3.5	1.2	2.4	-	0.015
2DARL-800	80:5	4.0	1.2	2.4	4.8	0.016
2DARL-101	100:5	5.0	1.2	2.4	4.8	0.018
2DARL-121	120:5	5.0	1.2	2.4	2.4	0.022
2DARL-1250	125:5	5.0	0.6	1.2	2.4	0.028
2DARL-151	150:5	10.0	0.6	0.6	1.2	0.031
2DARL-201	200:5	12.5	0.3	0.3	1.2	0.047
2DARL-251	250:5	15.0	0.3	0.3	0.6	0.074
2DARL-301	300:5	20.0	0.3	0.3	0.6	0.089

EXCITATION CURVE

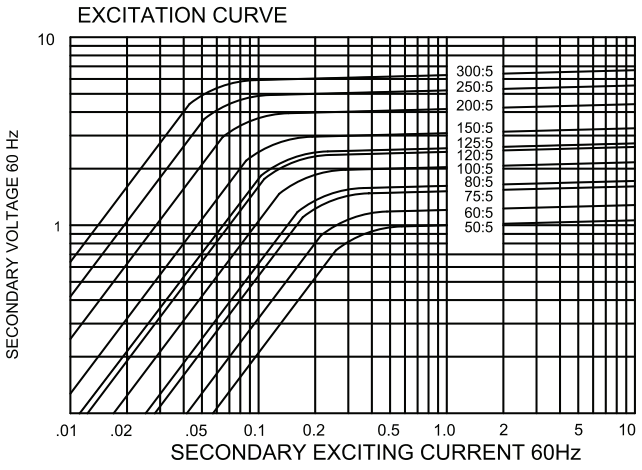

DIMENSIONS

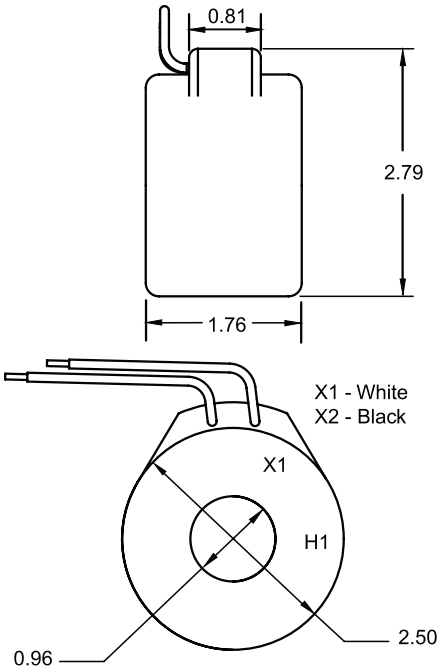

All Dimensions In Inches

FLEX-CORE®
Div. Morlan & Associates, Inc.
4970 Scioto Darby Rd. Hilliard, Ohio 43026

WWW.FLEX-CORE.COM
sales@flex-core.com

PHONE (614) 889-6152
TECH. ASSISTANCE (614) 876-8308
FAX # (614) 876-8538

CURRENT TRANSFORMERS

METERING CLASS CURRENT TRANSFORMER *MODEL* 5ARL

FEATURES

- Revenue Metering Applications
- Ammeters and Watt Meters
- UL Recognized
- Window I.D. - 1.56"

600V CLASS

c UL us E238872 CSA® 245941

RoHS COMPLIANT

MADE IN U.S.A.



SPECIFICATIONS

Frequency 50-400Hz
Insulation class ..... 0.6kV, 10kV BIL Full Wave
Leads ..... 16 AWG, 24" long, UL105°C
Weight ..... Approximately 1 Lb.

Manufactured to meet the requirements of ANSI/IEEE C57.13

APPLICATION AND ORDERING DATA

CATALOG NUMBER	CURRENT RATIO	V.A. FOR ± 1% CLASS	ANSI METERING CLASS AT 60 Hz					SECONDARY WINDING RESISTANCE (Ω @ 75°C)	CONTINUOUS THERMAL RATING FACTOR	
			B0.1	B0.2	B0.5	B0.9	B1.8		@30°C	@55°C
5ARL-101	100:5	1.0	1.2	2.4	-	-	-	0.012	2.0	2.0
5ARL-151	150:5	5.0	0.6	1.2	2.4	4.8	-	0.019	2.0	2.0
5ARL-201	200:5	5.0	0.6	0.6	1.2	2.4	4.8	0.024	2.0	2.0
5ARL-251	250:5	12.5	0.6	0.6	1.2	2.4	2.4	0.033	2.0	1.5
5ARL-301	300:5	15.0	0.3	0.3	0.6	1.2	2.4	0.040	2.0	1.5
5ARL-401	400:5	20.0	0.3	0.3	0.6	1.2	1.2	0.091	1.5	1.0
5ARL-501	500:5	25.0	0.3	0.3	0.6	0.6	1.2	0.105	1.33	0.8
5ARL-601	600:5	30.0	0.3	0.3	0.6	0.6	1.2	0.158	1.0	0.8

DIMENSIONS

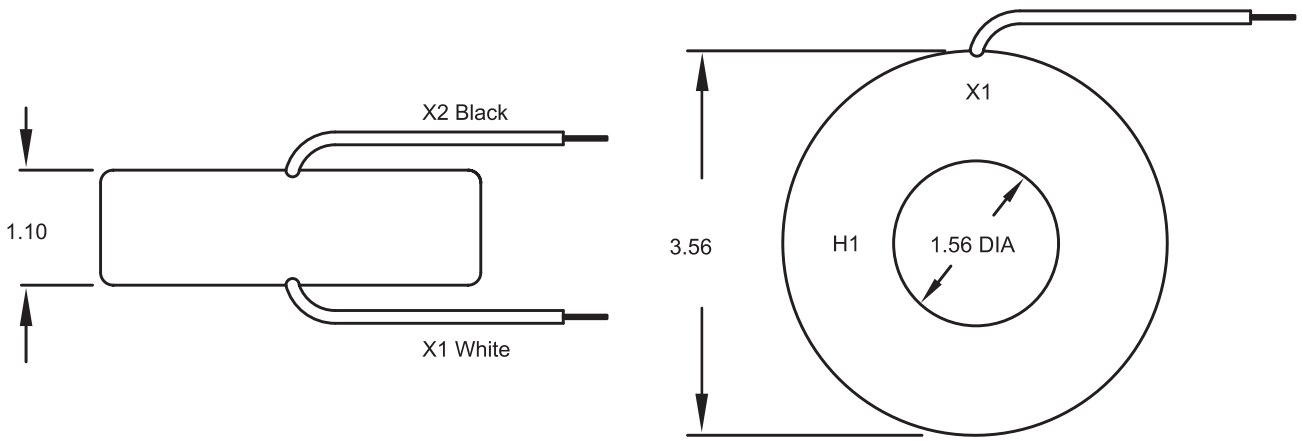

All Dimensions In Inches

FLEX-CORE®
Div. Morlan & Associates, Inc.
4970 Scioto Darby Rd. Hilliard, Ohio 43026

WWW.FLEX-CORE.COM
sales@flex-core.com

PHONE (614) 889-6152
TECH. ASSISTANCE (614) 876-8308
FAX # (614) 876-8538

CURRENT TRANSFORMERS

METERING CLASS CURRENT TRANSFORMER *MODEL* 60RBT

FEATURES

® E93779 ® LR89403

- UL Recognized
- Window I.D. - 0.94"
- Metering Applications
- For use with long runs of secondary wiring

600V CLASS



SPECIFICATIONS

Frequency 50-400Hz
Insulation Class ..... 0.6kV, 10kV BIL Full Wave
Terminals ..... Brass Studs No. 8-32 UNC with one flat washer, lock washer and regular nut.
Weight ..... Approximately 5.25 Lbs.
Manufactured to meet the requirements of ANSI/IEEE C57.13

APPLICATION AND ORDERING DATA

CATALOG NUMBER	CURRENT RATIO	VA FOR ± 6% CLASS	VA FOR ± 3% CLASS	ANSI METERING CLASS AT 60Hz					SECONDARY WINDING RESISTANCE (Ω @ 60Hz)	CONTINUOUS THERMAL RATING FACTOR	
				B0.1	B0.2	B0.5	B0.9	B1.8		@30°C	@55°C
60RBT-500	50:5	10.0	2.5	1.2	4.8	-	-	-	0.018	2.0	2.0
60RBT-600	60:5	15.0	3.0	1.2	2.4	-	-	-	0.021	2.0	2.0
60RBT-750	75:5	-	10.0	0.6	1.2	4.8	-	-	0.027	2.0	2.0
60RBT-800	80:5	-	15.0	0.6	1.2	2.4	4.8	-	0.028	2.0	2.0
60RBT-101	100:5	-	7.5±1%	0.6	0.6	2.4	4.8	4.8	0.037	2.0	2.0
60RBT-121	120:5	-	12.5±1%	0.6	0.6	1.2	2.4	4.8	0.043	2.0	2.0
60RBT-1250	125:5	-	15.0±1%	0.6	0.6	1.2	2.4	4.8	0.044	2.0	2.0
60RBT-151	150:5	-	20.0±1%	0.3	0.3	0.6	1.2	2.4	0.055	2.0	1.5
60RBT-201	200:5	-	25.0±1%	0.3	0.3	0.3	0.6	1.2	0.073	2.0	1.5

DIMENSIONS

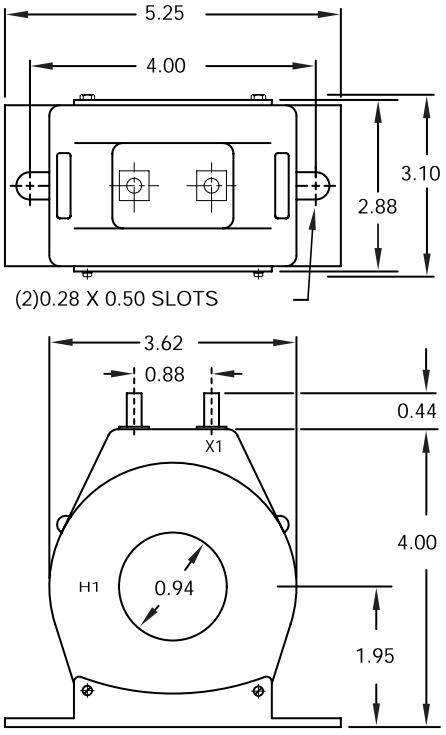

All Dimensions In Inches

EXCITATION CURVE

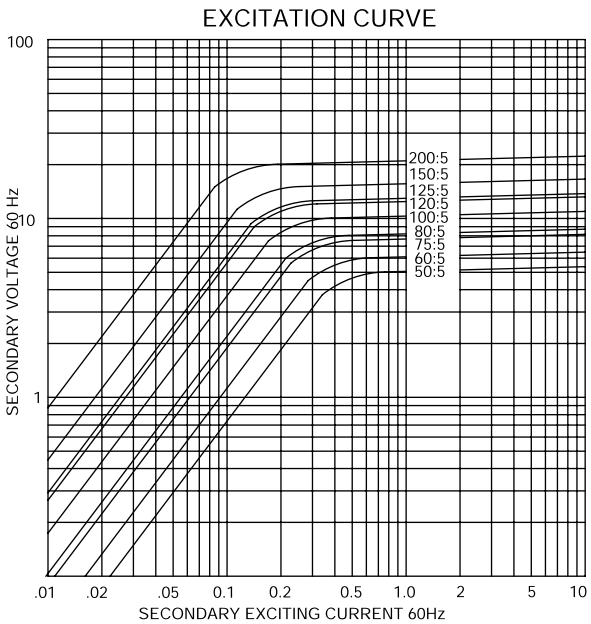

FLEX-CORE®
Div. Morlan & Associates, Inc.
4970 Scioto Darby Rd. Hilliard, Ohio 43026
WWW.FLEX-CORE.COM
sales@flex-core.com
PHONE (614) 889-6152
TECH. ASSISTANCE (614) 876-8308
FAX # (614) 876-8538

CURRENT TRANSFORMERS

METERING CLASS CURRENT TRANSFORMER *MODEL* 180RL

FEATURES

- Revenue Metering Applications
- UL Recognized
- Window I.D. - 2.50"
- For use with long runs of secondary wiring

600V CLASS

c UL E93779 CSA LR89403



SPECIFICATIONS

Frequency 50-400Hz
Insulation class ..... 0.6kV, BIL 10kV Full Wave
Leads ..... 16 AWG, 24" long, UL105°C
Weight ..... Approximately 3.5 Lbs.
***Approved for Revenue Metering by Industry Canada T-189 (*)**
Manufactured to meet the requirements of ANSI/IEEE C57.13

APPLICATION AND ORDERING DATA

CATALOG NUMBER	CURRENT RATIO	V.A. FOR ± 1% CLASS	ANSI METERING CLASS AT 60Hz					SECONDARY WINDING RESISTANCE (Ω @ 75°C)	CONTINUOUS THERMAL RATING FACTOR	
			B0.1	B0.2	B0.5	B0.9	B1.8		@30°C	@55°C
180RL-500	50:5	1.5	2.4	-	-	-	-	0.009	1.33	1.0
180RL-101	100:5	2.5	1.2	2.4	4.8	-	-	0.021	1.33	1.0
180RL-151	150:5*	5.0	0.6	1.2	2.4	4.8	-	0.038	1.33	1.0
180RL-201	200:5*	12.5	0.6	0.6	1.2	2.4	-	0.051	1.33	1.0
180RL-251	250:5*	12.5	0.3	0.3	0.6	1.2	-	0.064	1.33	1.0
180RL-301	300:5*	25.0	0.3	0.3	0.6	1.2	2.4	0.076	1.33	1.0
180RL-401	400:5*	50.0	0.3	0.3	0.3	0.6	1.2	0.102	1.33	1.0
180RL-501	500:5*	50.0	0.3	0.3	0.3	0.6	1.2	0.148	1.33	1.0
180RL-601	600:5*	50.0	0.3	0.3	0.3	0.6	1.2	0.177	1.33	1.0
180RL-801	800:5*	75.0	0.3	0.3	0.3	0.6	1.2	0.202	1.33	1.0
180RL-102	1000:5*	100.0	0.3	0.3	0.3	0.3	0.6	0.253	1.33	1.0

EXCITATION CURVE

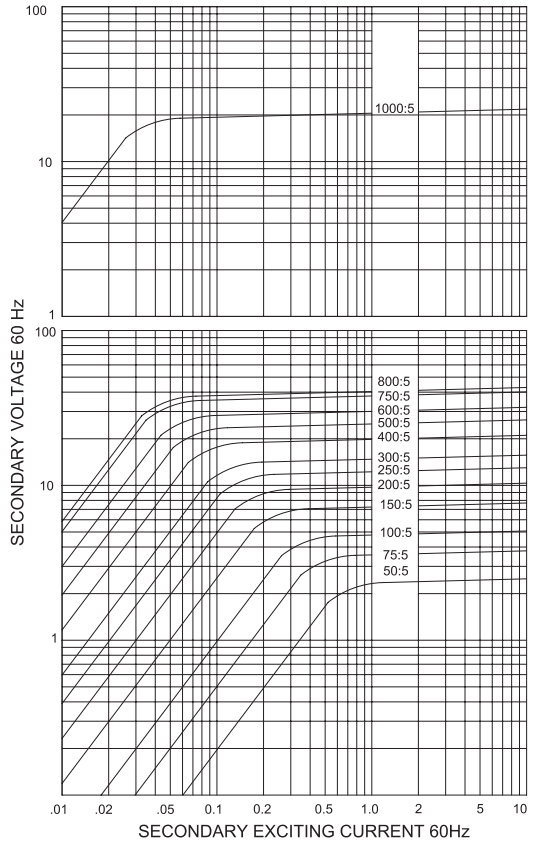

DIMENSIONS

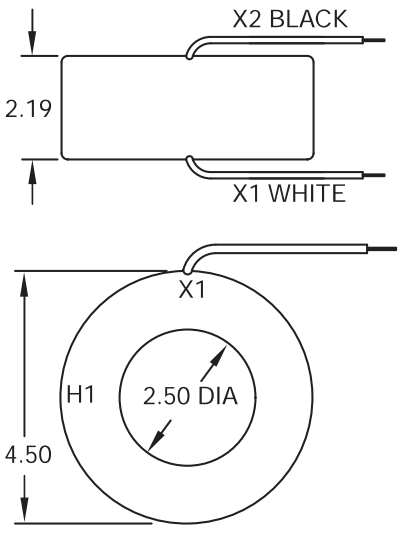

All Dimensions In Inches

FLEX-CORE®
Div. Morlan & Associates, Inc.
4970 Scioto Darby Rd. Hilliard, Ohio 43026
WWW.FLEX-CORE.COM
sales@flex-core.com
PHONE (614) 889-6152
TECH. ASSISTANCE (614) 876-8308
FAX # (614) 876-8538

CURRENT TRANSFORMERS

METERING CLASS CURRENT TRANSFORMER *MODELS* 19SHT, 19RL

FEATURES

- Metering Applications
- UL Recognized
- Window I.D. - 4.25"

600V CLASS



19RL



19SHT

MADE IN U.S.A.

RoHS COMPLIANT

c UL us E238872 SP® 245941

SPECIFICATIONS

Frequency 50-400Hz
Insulation Class ..... 0.6kV, 10kV BIL Full Wave
Terminals .....Brass Studs No. 8-32 UNC with one flat washer, lock washer and regular nut. (Model 19SHT)
Leads.....16 AWG, 24" long, UL105°C (Model 19RL)
Weight ..... Approximately 3 Lbs.
Optional Mounting Bracket (19SHT)..... P/N 0221B00183
Optional Bus Bar Mounting Kit (19RL) ..... P/N 0221A26075
Manufactured to meet the requirements of ANSI/IEEE C57.13

APPLICATION AND ORDERING DATA

CATALOG NUMBER	CATALOG NUMBER	CURRENT RATIO	V.A. FOR ± 1% CLASS	ANSI METERING CLASS AT 60Hz				SECONDARY WINDING RESISTANCE (Ω @ 75°C)	CONTINUOUS THERMAL RATING FACTOR	
				B0.1	B0.2	B0.5	B0.9		@30°C	@55°C
19SHT-501	19RL-501	500:5	15.0	0.3	0.6	1.2	--	0.087	2.0	1.5
19SHT-601	19RL-601	600:5	15.0	0.3	0.3	0.6	1.2	0.116	2.0	1.5
19SHT-801	19RL-801	800:5	30.0	0.3	0.3	0.6	0.6	0.155	1.5	1.33
19SHT-102	19RL-102	1000:5	30.0	0.3	0.3	0.6	0.6	0.242	1.33	1.0
19SHT-122	19RL-122	1200:5	40.0	0.3	0.3	0.3	0.6	0.291	1.33	1.0
19SHT-152	19RL-152	1500:5	15.0	0.3	0.3	0.6	1.2	0.200	1.5	1.0
19SHT-162	19RL-162	1600:5	15.0	0.3	0.3	0.3	0.6	0.213	1.5	1.0
19SHT-202	19RL-202	2000:5	20.0	0.3	0.3	0.3	0.6	0.266	1.33	1.0
19SHT-252	19RL-252	2500:5	20.0	0.3	0.3	0.3	0.3	0.333	1.0	0.8
19SHT-302	19RL-302	3000:5	25.0	0.3	0.3	0.3	0.3	0.399	1.0	0.8

EXCITATION CURVE

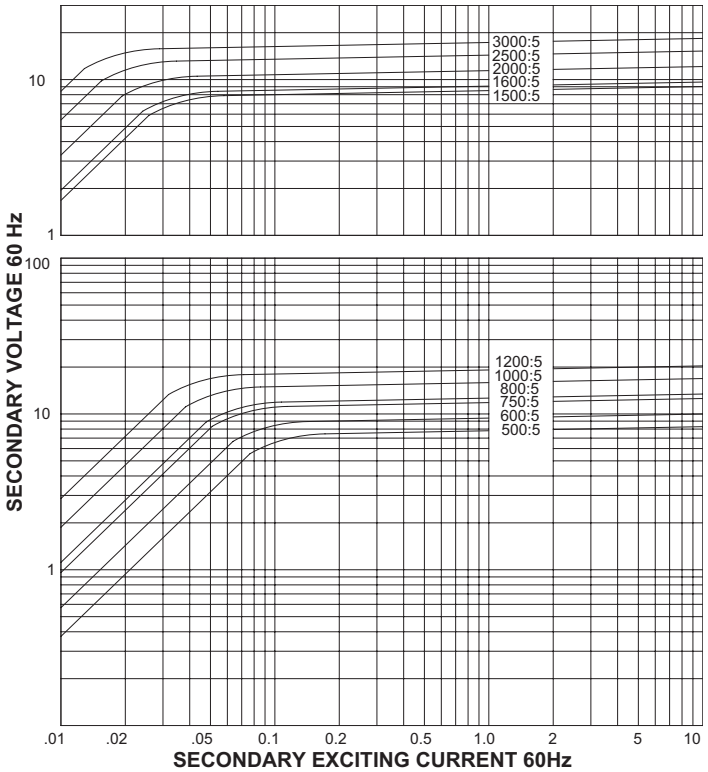

MODEL 19SHT DIMENSIONS

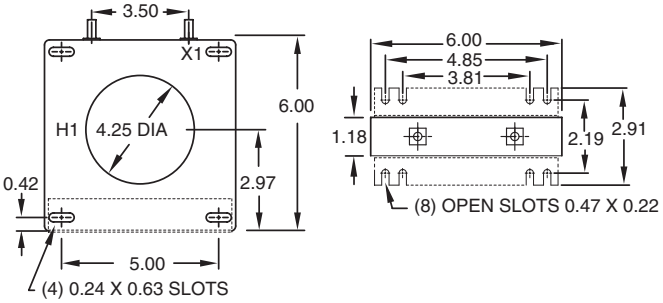

All Dimensions In Inches

MODEL 19RL DIMENSIONS

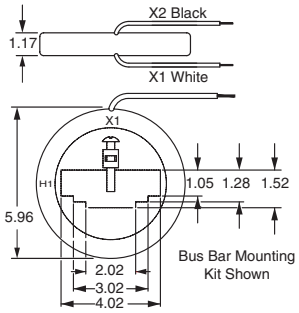

All Dimensions In Inches

FLEX-CORE®
Div. Morlan & Associates, Inc.
4970 Scioto Darby Rd. Hilliard, Ohio 43026
WWW.FLEX-CORE.COM
sales@flex-core.com
PHONE (614) 889-6152
TECH. ASSISTANCE (614) 876-8308
FAX # (614) 876-8538

CURRENT TRANSFORMERS

METERING CLASS CURRENT TRANSFORMER *MODELS* 125, 126

FEATURES

- Model 125 Terminals are Brass Studs No. 8-32 UNC
- Model 126 Terminals are Brass Studs No. 10-32 UNC (Each with flat washer, lockwasher and regular nut.)

600V CLASS

APPLICATIONS

- For use with AGW series and AGH series Watt and Watt/Watt Hour Transducers.
- Ideal for use with Ammeters, Set Point Relays, Watt, Var, Current Transducers and Watt Hour Meters.

c UL us E238872 CSA 245941

RoHS COMPLIANT

MADE IN U.S.A.

SPECIFICATIONS

Frequency..... 50 to 400Hz
Insulation Class ..... 0.6kV 10kV BIL Full Wave
Weight .....Model 125..... 3 Lbs.
Model 126..... 5.5 Lbs.
Mounting Brackets.....Model 125..... P/N 0221B00231
Model 126..... P/N 0221B01529
Bus Bar Mounting Kit...Model 125..... P/N 0221A26076
Manufactured to meet the requirements of ANSI/IEEE C57.13





APPLICATION AND ORDERING DATA

CATALOG NUMBER	CURRENT RATIO	ANSI METERING CLASS ACCURACY AT 60Hz					SECONDARY WINDING RESISTANCE	CONTINUOUS THERMAL RATING FACTOR	
		B0.1	B0.2	B0.5	B0.9	B1.8	(Ω @ 75°C)	@30°C	@55°C
125-102	1000:5	0.3	0.3	0.3	0.6	1.2	0.187	1.5	1.33
125-122	1200:5	0.3	0.3	0.3	0.6	1.2	0.223	1.5	1.33
125-152	1500:5	0.3	0.3	0.3	0.3	0.6	0.285	1.5	1.33
125-162	1600:5	0.3	0.3	0.3	0.3	0.6	0.304	1.5	1.33
125-202	2000:5	0.3	0.3	0.3	0.3	0.6	0.280	1.5	1.0
125-252	2500:5	0.3	0.3	0.3	0.3	0.6	0.351	1.33	1.0
125-302	3000:5	0.3	0.3	0.3	0.3	0.6	0.421	1.33	1.0
125-352	3500:5	0.3	0.3	0.3	0.3	0.3	0.491	1.33	1.0
125-402	4000:5	0.3	0.3	0.3	0.3	0.3	0.696	1.0	0.8
126-152	1500:5	0.3	0.3	0.3	0.3	0.3	0.434	1.5	1.0
126-162	1600:5	0.3	0.3	0.3	0.3	0.3	0.462	1.5	1.0
126-202	2000:5	0.3	0.3	0.3	0.3	0.3	0.578	1.33	1.0
126-252	2500:5	0.3	0.3	0.3	0.3	0.3	0.904	1.0	0.8
126-302	3000:5	0.3	0.3	0.3	0.3	0.3	0.722	1.33	1.0
126-322	3200:5	0.3	0.3	0.3	0.3	0.3	0.770	1.33	1.0
126-352	3500:5	0.3	0.3	0.3	0.3	0.3	0.842	1.0	0.8
126-402	4000:5	0.3	0.3	0.3	0.3	0.3	0.962	1.0	0.8
126-502	5000:5	0.3	0.3	0.3	0.3	0.3	1.203	1.0	0.8

MODEL 125 DIMENSIONS

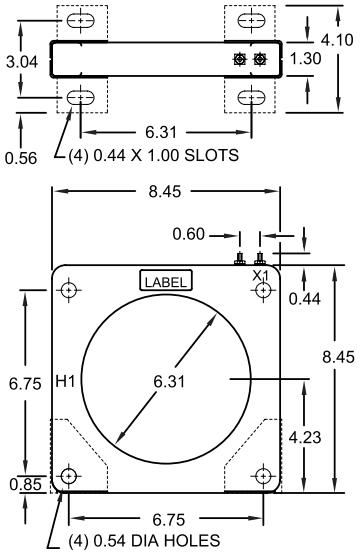

MODEL 126 DIMENSIONS

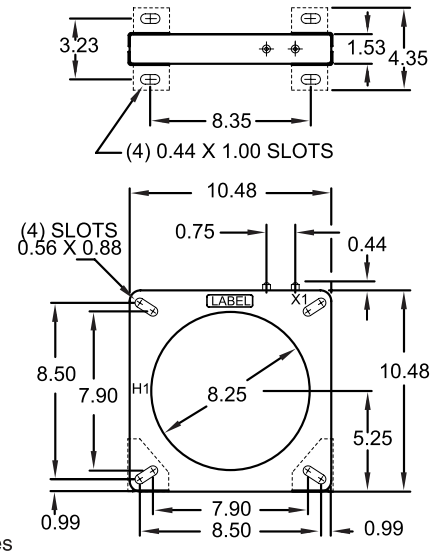

All Dimensions In Inches

FLEX-CORE®
Div. Morlan & Associates, Inc.
4970 Scioto Darby Rd. Hilliard, Ohio 43026
WWW.FLEX-CORE.COM
sales@flex-core.com
PHONE (614) 889-6152
TECH. ASSISTANCE (614) 876-8308
FAX # (614) 876-8538

CURRENT TRANSFORMERS

METERING CLASS CURRENT TRANSFORMER *MODELS* 19SHT, 125,126-1V

FEATURES

- 0-1Vac Output
- **0.3% Accuracy**

MADE IN U.S.A.

600V CLASS

E238872

APPLICATIONS

- For use with 0-1Vac input power meters.



19SHT-1V



125-1V



126-1V

SPECIFICATIONS

Frequency.....50-400Hz
Insulation Class ..... 0.6kV, 10kV BIL Full Wave
Terminals
Model 19SHT-1V ..... Brass Studs No. 8-32 with one flat washer, lock washer, and regular nut.
Model 125-1V ..... Brass Studs No. 8-32 with one flat washer, lock washer, and regular nut.
Model 126-1V ..... Brass Studs No. 10-32 with one flat washer, lock washer, and regular nut.
Weight
Model 19SHT-1V ..... Approximately 3 Lbs.
Model 125-1V ..... Approximately 3 Lbs.
Model 126-1V ..... Approximately 5.5 Lbs.
Mounting Brackets
Model 19SHT-1V ..... P/N 0221B00183
Model 125-1V ..... P/N 0221B00231
Model 126-1V ..... P/N 0221B01529

APPLICATION AND ORDERING DATA

CATALOG NUMBER 19SHT-1V	CATALOG NUMBER 125-1V	CATALOG NUMBER 126-1V	CURRENT RATIO	ACCURACY	CONTINUOUS THERMAL RATING FACTOR @ 30°C	CONTINUOUS THERMAL RATING FACTOR @ 55°C
19SHT-101-1V	-	-	100:1V	0.3%	1.0	0.8
19SHT-201-1V	-	-	200:1V	0.3%	1.0	0.8
19SHT-301-1V	-	-	300:1V	0.3%	1.0	0.8
19SHT-401-1V	-	-	400:1V	0.3%	1.0	0.8
19SHT-501-1V	125-501-1V	126-501-1V	500:1V	0.3%	1.0	0.8
19SHT-601-1V	125-601-1V	126-601-1V	600:1V	0.3%	1.0	0.8
19SHT-801-1V	125-801-1V	126-801-1V	800:1V	0.3%	1.0	0.8
-	125-102-1V	126-102-1V	1000:1V	0.3%	1.0	0.8
-	125-122-1V	126-122-1V	1200:1V	0.3%	1.0	0.8
-	125-152-1V	126-152-1V	1500:1V	0.3%	1.0	0.8
-	125-202-1V	126-202-1V	2000:1V	0.3%	1.0	0.8
-	-	126-252-1V	2500:1V	0.3%	1.0	0.8
-	-	126-302-1V	3000:1V	0.3%	1.0	0.8

19SHT-1V DIMENSIONS

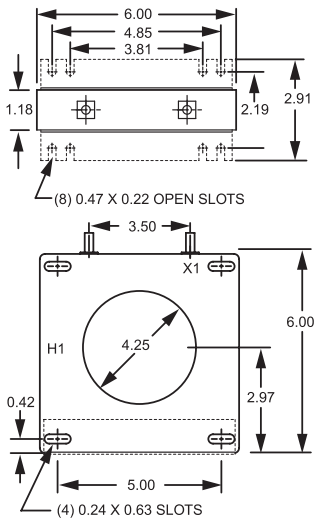

125-1V DIMENSIONS

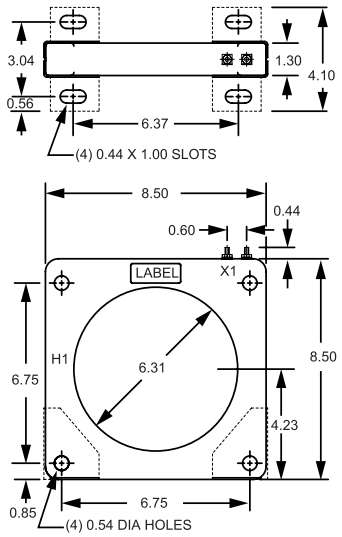

126-1V DIMENSIONS

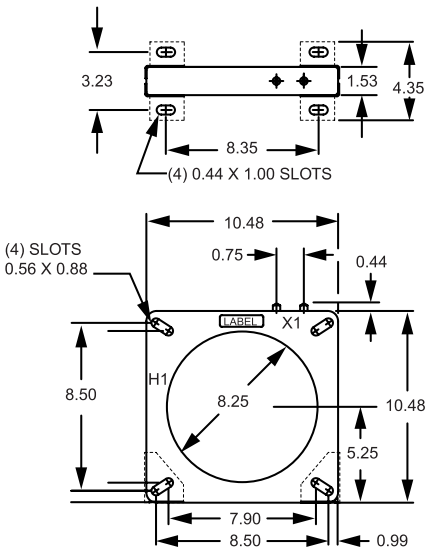

All Dimensions In Inches

FLEX-CORE®
Div. Morlan & Associates, Inc.
4970 Scioto Darby Rd. Hilliard, Ohio 43026

WWW.FLEX-CORE.COM
sales@flex-core.com

PHONE (614) 889-6152
TECH. ASSISTANCE (614) 876-8308
FAX # (614) 876-8538

CURRENT TRANSFORMERS

CURRENT TRANSFORMER — *MODEL* JAK-0C

APPLICATIONS

Designed for indoor/outdoor* service. Suitable for operating meters and instruments, on both single phase two-wire circuits and polyphase circuits. Outdoor type can be offered as an option.

SPECIFICATIONS

IEEE Meter Accuracy Class, 60Hz ... 0.3% class from B0.1 to the burdens shown in the table.
Insulation Class ..... 0.6kV, 10kV BIL Full Wave
Weight
Window-Type Transformer .....Approximately 13 Lbs.
Primary Bar-Type Transformer...Approximately 16 Lbs.
Terminals ..... Tin plated brass 1/4-28 clamp type**

600V CLASS



JAK-0C



JAK-0C With Busbar

APPLICATION AND ORDERING DATA							
CATALOG NUMBER LOW BASE	11.88" PRIMARY BAR ASSEMBLY	CURRENT RATIO (AMPS) PRI:SEC	CONTINUOUS THERMAL RATING FACTOR @30°C	CONTINUOUS THERMAL RATING FACTOR @55°C	WINDOW I.D. (INCHES)	DEPTH	BURDEN
WINDOW-TYPE, SINGLE RATIO							
750X133645	0821C34762-7	100:5	4.0	4.0	1.50	4.20	B0.2
750X133311	0821C34762-5	200:5	4.0	4.0	2.60	4.20	B0.5
750X133312	0821C34762-9	***300:5	4.0	2.9	3.062	5.00	B0.5
750X133313	0821C34762-4	400:5	4.0	2.9	3.062	4.20	B0.5
750X133314	0821C34762-6	500:5	3.0	2.4	3.062	2.63	B0.5
750X133315	0821C34762-6	600:5	2.0	1.8	3.062	2.63	B0.5
750X133316	0821C34762-6	800:5	2.0	1.5	3.062	2.63	B0.5
750X133547	0821C34762-13	1000:5	2.0	1.5	3.062	2.63	B0.5
750X133501	0821C34762-13	1200:5	1.5	1.1	3.062	2.63	B1.8
750X133505	0821C34762-18	1500:5	1.5	1.1	3.062	2.63	B1.8
750X133509	0821C34762-13	2000:5	1.0	0.7	3.062	2.63	B1.8

***Available only in 5" depth

DIMENSIONS

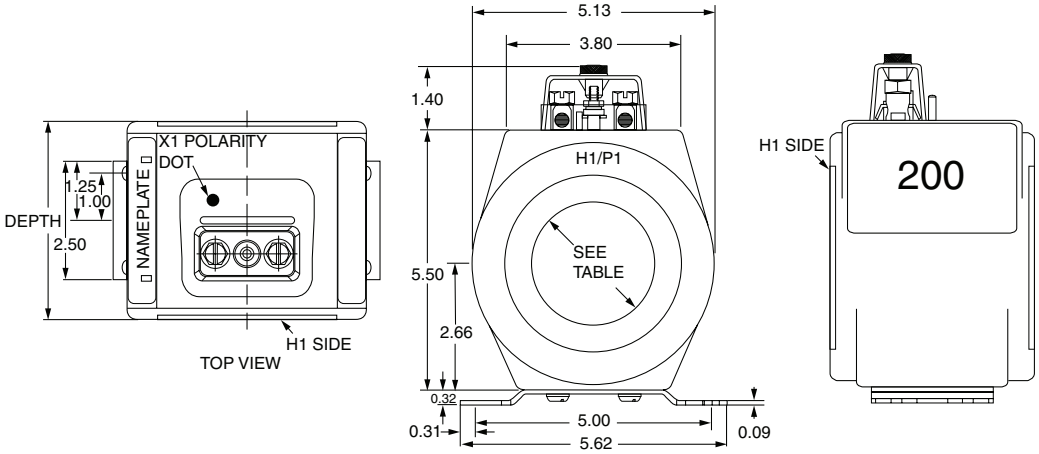

*Unit with watertight conduit box is available.
**Torque terminals to: 30 INCH-LBS.

FLEX-CORE®
Div. Morlan & Associates, Inc.
4970 Scioto Darby Rd. Hilliard, Ohio 43026
WWW.FLEX-CORE.COM
sales@flex-core.com
PHONE (614) 889-6152
TECH. ASSISTANCE (614) 876-8308
FAX # (614) 876-8538

CURRENT TRANSFORMERS

HIGH ACCURACY CURRENT TRANSFORMER *MODEL* JAK-0S

FEATURES

- Maximize revenue metering accuracy with special high accuracy rating extended beyond IEEE requirements.
- Simplify CT selection and billing multipliers, improving productivity and minimizing risk of error
- Reduce inventory and part number requirements, reducing asset and operational costs
- Window I.D. - 3.062"



600V CLASS

APPLICATIONS

JAK-0S is a revenue metering current transformer which maintains IEEE 0.15 accuracy class from 1% of rated current up through rating factor. This is accomplished using the specialized amorphous core material which minimizes electrical core losses. The result is an extremely accurate CT that can maintain high accuracy over a extended range of current. Model JAK-0S is designed for indoor service.
Optional Bar Kits available, see application table.

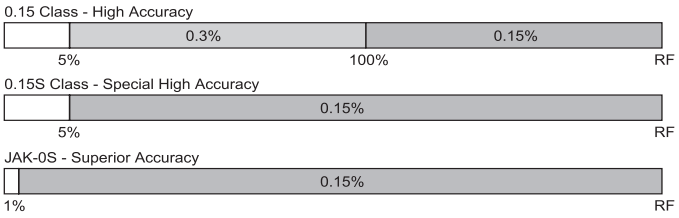

SPECIFICATIONS

Frequency.....50-60Hz
Insulation Class .....0.6kV, 10kV BIL Full Wave
Weight
Transformer ..... Approximately 9 Lbs.
Primary Bar .....Add 3 Lbs.

CONSTRUCTION DETAILS

Construction and Insulation
The core and coil assembly is encapsulated in resin within a molded case. The case is molded with Valox thermoplastic polyester resin. This tough material has excellent electrical and mechanical properties over a wide temperature range, has low water absorption and is resistant to oil and a variety of chemicals. The polyurethane resin filling completely encapsulates the winding, leads and terminals to form a waterproof unit.

Core and Coils
The core is manufactured with high-efficiency material that reduces energy losses, allowing for higher accuracy over a wider range. The secondary winding is made of heavy enameled copper wire evenly distributed around the core for maximum accuracy and resistance to stray fields from adjacent conductors.

Terminals
Secondary terminals are tin plated brass, compression type with a 0.275” diameter cross-hole for wiring and a 1/4-28 clamp screw. A shorting device is provided and interlocked to the terminal cover. The terminal cover is made of a clear plastic.
Provision is made for sealing the cover.

Polarity
The H1 polarity mark is indented into the body, above the window at one end. The X1 polarity mark is also molded into the body adjacent to the secondary terminal. Both marks are white for visibility.

Nameplates
The nameplate is laser engraved aluminum. It is attached to the top of the unit. The nominal current rating is marked on the side of the unit in large numerals.

Primary Bars (Optional)
Formed from flat copper bar, they are tin-plated. They can be supplied mounted to the transformer, or separately for assembly into window-type units; they can be rotated to bring the terminal pads into any orientation. The bar is supported and held in place by two end plates, which act as small animal barriers. One plate is permanently attached to the bar; the other has a slot allowing it to be slipped over the bar where it is held in place by two setscrews. Holes in the plate allow ventilation and drainage of any water which might accumulate in the window. A potential connector is provided, adjacent to the fixed end plate.

Baseplate and Mounting
The transformer can be mounted in any position and may be suspended from the bus-bar or cable. The base is made from stainless steel.

Maintenance
These transformers require no maintenance, other than occasional cleaning, if installed where air contamination is severe.

FLEX-CORE®
Div. Morlan & Associates, Inc.
4970 Scioto Darby Rd. Hilliard, Ohio 43026
WWW.FLEX-CORE.COM
sales@flex-core.com
PHONE (614) 889-6152
TECH. ASSISTANCE (614) 876-8308
FAX # (614) 876-8538

CURRENT TRANSFORMERS

HIGH ACCURACY CURRENT TRANSFORMER *MODEL* JAK-0S

APPLICATION AND ORDERING DATA							
CATALOG NUMBER LOW BASE	11.88" PRIMARY BAR ASSEMBLY	CURRENT RATIO (AMPS) PRI:SEC	CONTINUOUS THERMAL RATING FACTOR @30°C	CONTINUOUS THERMAL RATING FACTOR @55°C	WINDOW I.D. (INCHES)	DEPTH (INCHES)	MAX BURDEN FOR 0.15% ACCURACY 1% - RF
WINDOW STYLE, NO PRIMARY BAR, SINGLE RATIO							
750X333012	0821C34762-4	600:5	2.0	1.5	3.062	4.20	B0.5
750X333016	0821C34762-10	1000:5	2.0	1.5	3.062	4.20	B0.5

DIMENSIONS

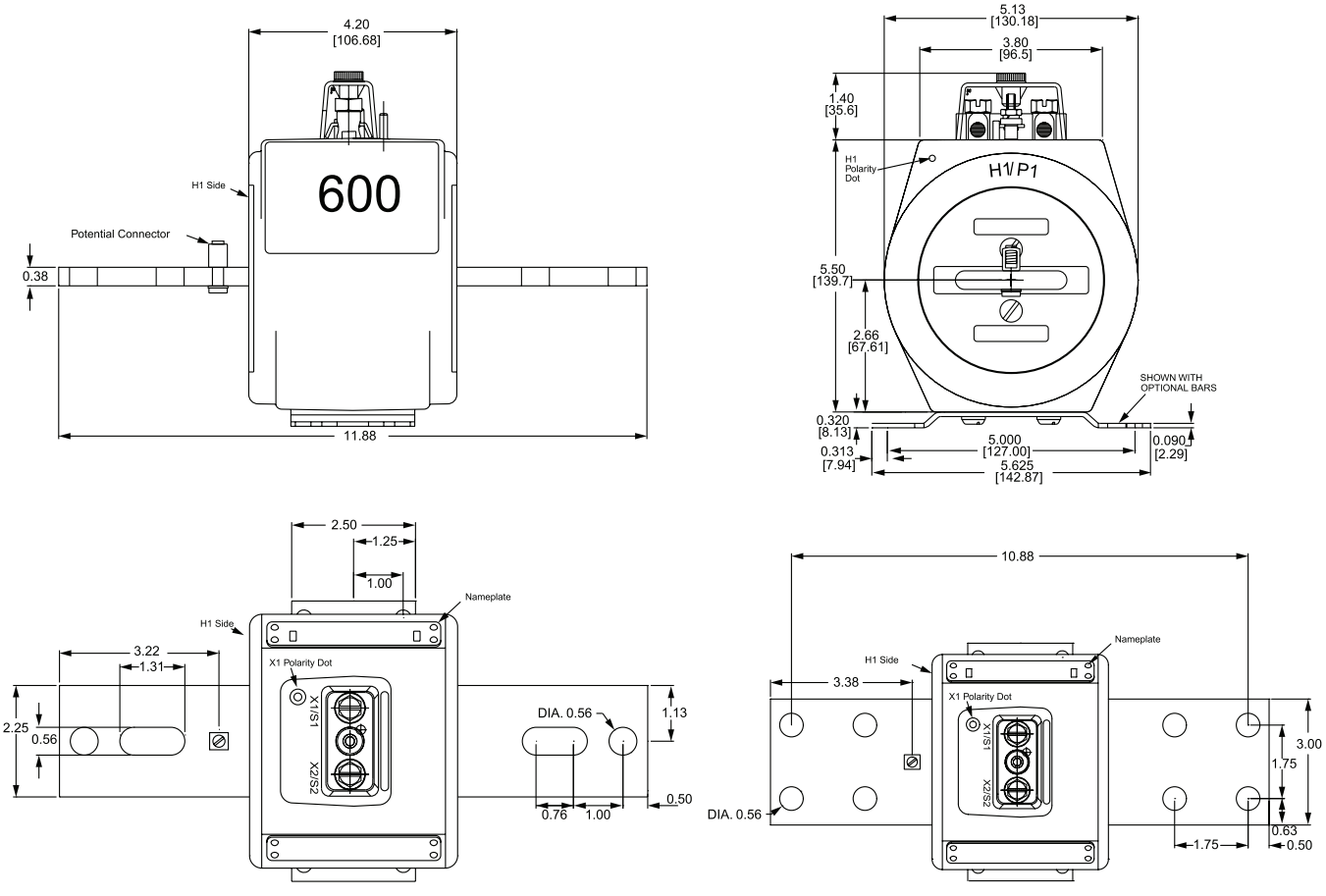

0821C34762-4
PRIMARY BAR ASSEMBLY

0821C34762-10
PRIMARY BAR ASSEMBLY

All Dimensions In Inches (mm)

FLEX-CORE®
Div. Morlan & Associates, Inc.
4970 Scioto Darby Rd. Hilliard, Ohio 43026

WWW.FLEX-CORE.COM
sales@flex-core.com

PHONE (614) 889-6152
TECH. ASSISTANCE (614) 876-8308
FAX # (614) 876-8538

CURRENT TRANSFORMERS

METERING CLASS CURRENT TRANSFORMER *MODELS* 191, 194, 195

ACCURATE TO 0.3%

FEATURES

- For use with Watt, Var, Watt/Var, Watt/Watthour Transducers, Meters and Relays
- Meets ANSI specifications for sub-metering applications.
- UL Recognized.

SPECIFICATIONS

Frequency..... 50 to 400Hz
Insulation Class .....0.6kV, 10kV BIL Full Wave
Terminals .....Brass Studs No. 8-32 UNC with one flat washer, lock washer and regular nut.
Mounting Bracket..... P/N 0221B00777

Manufactured to meet the requirements of ANSI/IEEE C57.13

600V CLASS



191



194



195

c UL us E238872

245941

RoHS COMPLIANT

MADE IN U.S.A.

APPLICATION AND ORDERING DATA

MODEL NUMBER	CURRENT RATIO	WEIGHT (LBS.)	ANSI METERING CLASS ACCURACY AT 60Hz					RELAY CLASS	SECONDARY WINDING RESISTANCE (Ω @ 75°C)	CONTINUOUS THERMAL RATING FACTOR	
			B0.1	B0.2	B0.5	B0.9	B1.8			@30°C	@55°C
191-101	100:5	5.5	0.6	0.6	2.4	4.8	-	-	0.034	2.0	2.0
191-151	150:5	5.5	0.3	0.3	1.2	1.2	2.4	C10	0.051	2.0	2.0
191-201	200:5	5.5	0.3	0.3	0.6	1.2	2.4	C10	0.068	2.0	2.0
191-251	250:5	5.5	0.3	0.3	0.3	0.6	1.2	C20	0.085	2.0	1.5
191-301	300:5	5.5	0.3	0.3	0.3	0.3	0.6	C20	0.126	1.5	1.33
191-401	400:5	5.5	0.3	0.3	0.3	0.3	0.6	C20	0.189	1.5	1.0
194-401	400:5	3.5	0.3	0.3	0.3	0.6	1.2	C10	0.104	2.0	1.5
194-501	500:5	3.5	0.3	0.3	0.3	0.3	0.6	C10	0.133	1.5	1.0
195-501	500:5	2.25	0.3	0.3	0.3	0.6	1.2	-	0.105	2.0	1.5
194-601	600:5	3.5	0.3	0.3	0.3	0.6	0.6	C10	0.180	1.5	1.0
195-601	600:5	2.25	0.3	0.3	0.3	0.6	1.2	-	0.151	1.5	1.33
194-801	800:5	3.5	0.3	0.3	0.3	0.3	0.3	C10	0.302	1.0	0.8
195-801	800:5	2.25	0.3	0.3	0.3	0.6	0.6	-	0.265	1.0	0.8
194-102	1000:5	3.5	0.3	0.3	0.3	0.3	0.3	-	0.354	1.0	0.8
195-102	1000:5	2.25	0.3	0.3	0.3	0.6	0.6	-	0.209	1.0	0.8
194-122	1200:5	3.5	0.3	0.3	0.3	0.3	0.3	-	0.425	1.0	0.8
195-122	1200:5	2.25	0.3	0.3	0.3	0.3	0.6	-	0.301	1.0	0.6
194-152	1500:5	3.5	0.3	0.3	0.3	0.3	0.3	-	0.531	1.0	0.6
195-152	1500:5	2.25	0.3	0.3	0.3	0.3	0.6	-	0.471	1.0	0.6
195-162	1600:5	2.25	0.3	0.3	0.3	0.3	0.6	-	0.502	1.0	0.6
195-202	2000:5	2.25	0.3	0.3	0.3	0.3	0.3	-	0.782	0.6	0.6

MODEL 191

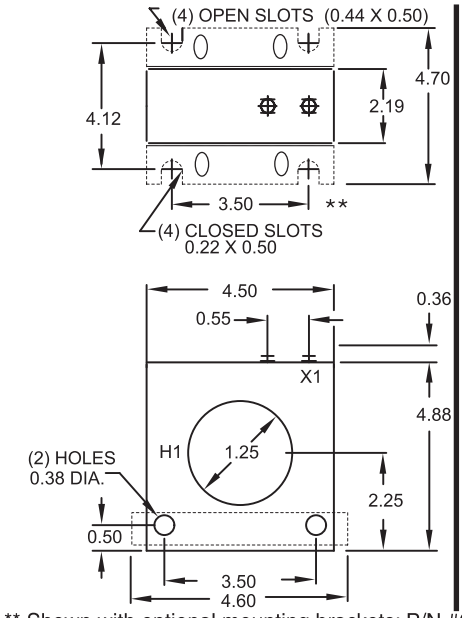

MODEL 194

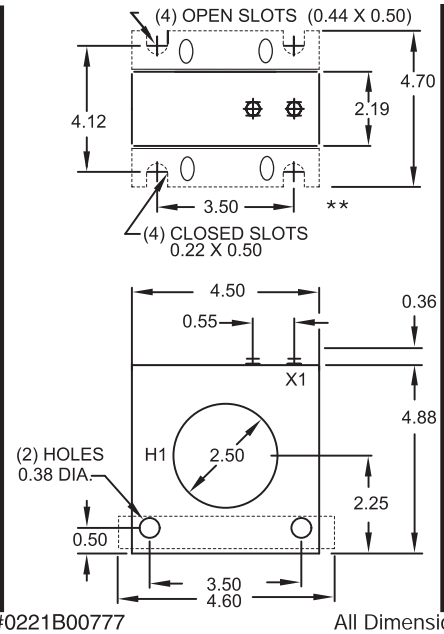

MODEL 195

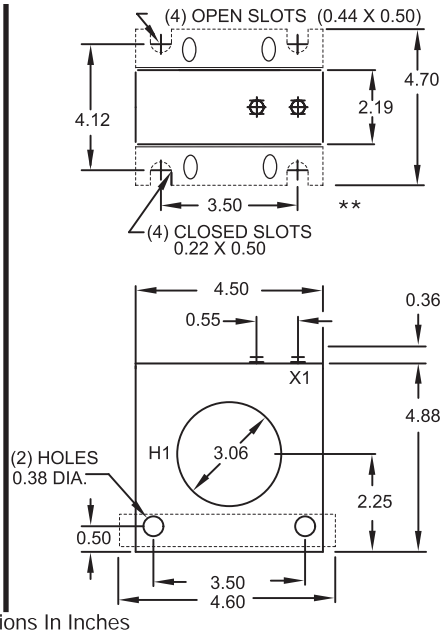

** Shown with optional mounting brackets: P/N #0221B00777

All Dimensions In Inches

FLEX-CORE®
Div. Morlan & Associates, Inc.
4970 Scioto Darby Rd. Hilliard, Ohio 43026

WWW.FLEX-CORE.COM
sales@flex-core.com

PHONE (614) 889-6152
TECH. ASSISTANCE (614) 876-8308
FAX # (614) 876-8538

CURRENT TRANSFORMERS

RELAY/METER CLASS CURRENT TRANSFORMER *MODEL* 110

FEATURES

- UL Recognized
- Window I.D. - 4.0"
- Relaying and Metering Applications

E93779 LR89403



600V CLASS

SPECIFICATIONS

Frequency 50-400Hz
Insulation Class ..... 0.6kV, 10kV BIL Full Wave
Terminals ..... Brass Studs No. 8-32 UNC with one flat washer, lock washer and regular nut.
Weight ..... Approximately 13 Lbs.
Mounting Bracket ..... P/N 0221B00186
Manufactured to meet the requirements of ANSI/IEEE C57.13

APPLICATION AND ORDERING DATA

CATALOG NUMBER	CURRENT RATIO	RELAY CLASS	ANSI METERING CLASS AT 60Hz					SECONDARY WINDING RESISTANCE (Ω @ 75°C)	CONTINUOUS THERMAL RATING FACTOR	
			B0.1	B0.2	B0.5	B0.9	B1.8		@30°C	@55°C
110-201	200:5	C10	0.6	1.2	1.2	2.4	-	0.085	2.0	2.0
110-301	300:5	C20	0.3	0.6	0.6	1.2	2.4	0.128	2.0	2.0
110-401	400:5	C20	0.3	0.3	0.3	0.6	1.2	0.152	2.0	2.0
110-501	500:5	C20	0.3	0.3	0.3	0.6	0.6	0.214	2.0	1.5
110-601	600:5	C50	0.3	0.3	0.3	0.3	0.6	0.256	2.0	1.5
110-801	800:5	C50	0.3	0.3	0.3	0.3	0.3	0.342	1.5	1.33
110-102	1000:5	C100	0.3	0.3	0.3	0.3	0.3	0.427	1.5	1.0
110-122	1200:5	C50	0.3	0.3	0.3	0.3	0.3	0.489	1.5	1.0
110-152	1500:5	C100	0.3	0.3	0.3	0.3	0.3	0.611	1.33	1.0
110-162	1600:5	C100	0.3	0.3	0.3	0.3	0.3	0.652	1.0	1.0
110-202	2000:5	C100	0.3	0.3	0.3	0.3	0.3	0.815	1.0	0.8
110-252	2500:5	C100	0.3	0.3	0.3	0.3	0.3	0.974	1.0	0.8
110-302	3000:5	C100	0.3	0.3	0.3	0.3	0.3	1.168	1.0	0.6

DIMENSIONS

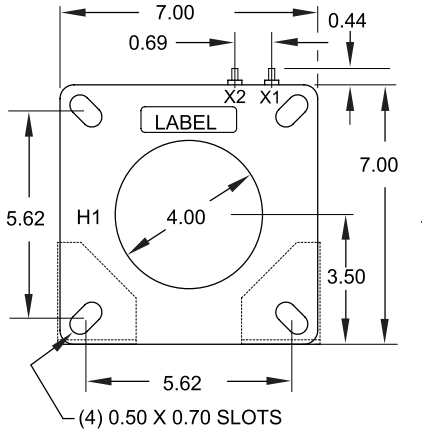

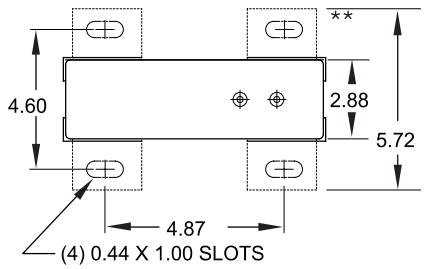

** Shown with optional mounting brackets: P/N #0221B00186

All Dimensions In Inches

EXCITATION CURVE

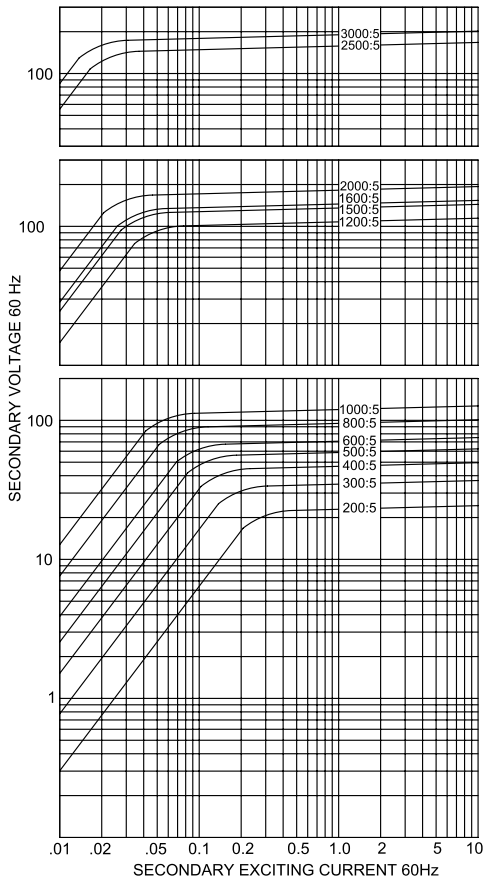

FLEX-CORE®
Div. Morlan & Associates, Inc.
4970 Scioto Darby Rd. Hilliard, Ohio 43026

WWW.FLEX-CORE.COM
sales@flex-core.com

PHONE (614) 889-6152
TECH. ASSISTANCE (614) 876-8308
FAX # (614) 876-8538

CURRENT TRANSFORMERS

RELAY/METER CLASS CURRENT TRANSFORMER *MODEL* 114

FEATURES

- UL Recognized
- Window I.D. - 3.25"
- Relaying and Metering Applications

c UL us E238872 CSA 245941

600V CLASS

MADE IN U.S.A.

RoHS COMPLIANT



SPECIFICATIONS

Frequency 50-400Hz
Insulation Class ..... 0.6kV, 10kV BIL Full Wave
Terminals ..... Brass Studs No. 8-32 UNC with one flat washer, lock washer and regular nut.
Weight ..... Approximately 22 Lbs.
Mounting Bracket ..... P/N 0221B01525

Manufactured to meet the requirements of ANSI/IEEE C57.13

APPLICATION AND ORDERING DATA

CATALOG NUMBER	CURRENT RATIO	RELAY CLASS	ANSI METERING CLASS AT 60Hz					SECONDARY WINDING RESISTANCE (Ω @ 75°C)	CONTINUOUS THERMAL RATING FACTOR	
			B0.1	B0.2	B0.5	B0.9	B1.8		@30°C	@55°C
114-500	50:5	C10	1.2	4.8	-	-	-	0.025	2.0	2.0
114-750	75:5	C10	1.2	1.2	4.8	-	-	0.046	2.0	2.0
114-101	100:5	C10	1.2	1.2	2.4	4.8	-	0.062	2.0	2.0
114-151	150:5	C20	0.6	0.6	1.2	2.4	4.8	0.093	2.0	2.0
114-201	200:5	C20	0.3	0.3	0.6	1.2	2.4	0.113	2.0	2.0
114-251	250:5	C50	0.3	0.3	0.6	1.2	1.2	0.155	2.0	2.0
114-301	300:5	C50	0.3	0.3	0.6	0.6	1.2	0.186	2.0	2.0
114-401	400:5	C50	0.3	0.3	0.3	0.3	0.6	0.248	2.0	1.5
114-501	500:5	C100	0.3	0.3	0.3	0.3	0.6	0.309	2.0	1.5
114-601	600:5	C100	0.3	0.3	0.3	0.3	0.3	0.371	1.5	1.33
114-751	750:5	C100	0.3	0.3	0.3	0.3	0.3	0.464	1.5	1.0
114-801	800:5	C100	0.3	0.3	0.3	0.3	0.3	0.495	1.5	1.0
114-102	1000:5	C100	0.3	0.3	0.3	0.3	0.3	0.597	1.5	1.0
114-122	1200:5	C200	0.3	0.3	0.3	0.3	0.3	0.716	1.33	1.0
114-152	1500:5	C200	0.3	0.3	0.3	0.3	0.3	0.896	1.0	0.8
114-162	1600:5	C200	0.3	0.3	0.3	0.3	0.3	0.955	1.0	0.8

DIMENSIONS

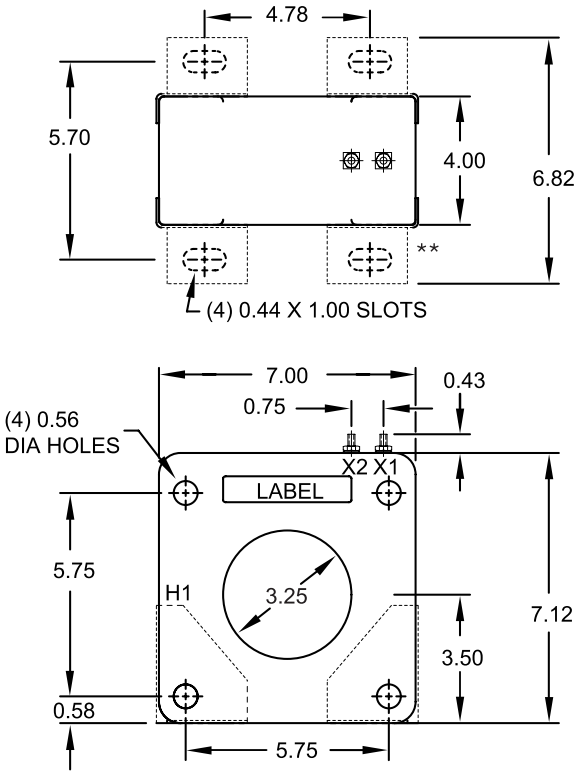

** Shown with optional mounting brackets: P/N #0221B00525
All Dimensions In Inches

EXCITATION CURVE

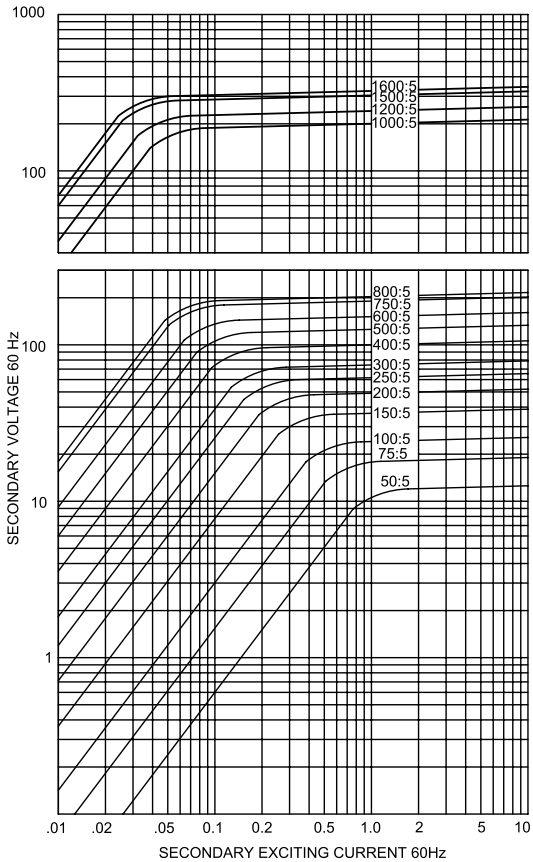

FLEX-CORE®
Div. Morlan & Associates, Inc.
4970 Scioto Darby Rd. Hilliard, Ohio 43026

WWW.FLEX-CORE.COM
sales@flex-core.com

PHONE (614) 889-6152
TECH. ASSISTANCE (614) 876-8308
FAX # (614) 876-8538

CURRENT TRANSFORMERS

RELAY/METER CLASS CURRENT TRANSFORMER *MODEL* 130

FEATURES

E93779 LR89403

- UL Recognized
- Window I.D. - 5.75"
- Relaying and Metering Applications

600V CLASS



SPECIFICATIONS

Frequency 50-400Hz
Insulation Class ..... 0.6kV, 10kV BIL Full Wave
Terminals ..... Brass Studs No. 8-32 UNC with one flat washer, lock washer and regular nut.
Weight ..... Approximately 18 Lbs.
Mounting Bracket ..... P/N 0221B00186
Manufactured to meet the requirements of ANSI/IEEE C57.13

APPLICATION AND ORDERING DATA

CATALOG NUMBER	CURRENT RATIO	RELAY CLASS	ANSI METERING CLASS AT 60Hz					SECONDARY WINDING RESISTANCE (Ω @75°C)	CONTINUOUS THERMAL RATING FACTOR	
			B0.1	B0.2	B0.5	B0.9	B1.8		@30°C	@55°C
130-201	200:5	C10	0.6	0.6	2.4	2.4	4.8	0.064	2.0	2.0
130-301	300:5	C20	0.3	0.3	1.2	1.2	2.4	0.105	2.0	2.0
130-401	400:5	C20	0.3	0.3	0.6	1.2	1.2	0.140	2.0	2.0
130-501	500:5	C20	0.3	0.3	0.3	0.6	1.2	0.175	2.0	2.0
130-601	600:5	C20	0.3	0.3	0.3	0.6	1.2	0.210	2.0	1.5
130-801	800:5	C50	0.3	0.3	0.3	0.3	0.6	0.324	2.0	1.5
130-102	1000:5	C50	0.3	0.3	0.3	0.3	0.3	0.404	1.5	1.33
130-122	1200:5	C100	0.3	0.3	0.3	0.3	0.3	0.485	1.5	1.0
130-152	1500:5	C100	0.3	0.3	0.3	0.3	0.3	0.607	1.5	1.0
130-162	1600:5	C100	0.3	0.3	0.3	0.3	0.3	0.647	1.33	1.0
130-202	2000:5	C100	0.3	0.3	0.3	0.3	0.3	0.783	1.33	1.0
130-252	2500:5	C100	0.3	0.3	0.3	0.3	0.3	0.979	1.0	0.8
130-302	3000:5	C100	0.3	0.3	0.3	0.3	0.3	1.175	1.0	0.8
130-402	4000:5	C100	0.3	0.3	0.3	0.3	0.3	1.484	1.0	0.6

DIMENSIONS

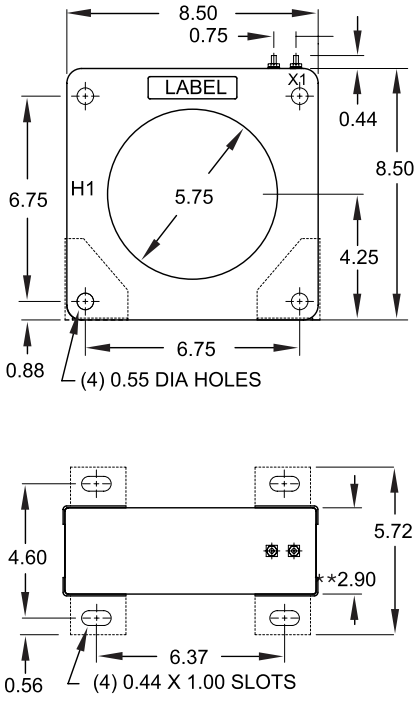

** Shown with optional mounting brackets: P/N #0221B00186

All Dimensions In Inches

EXCITATION CURVE

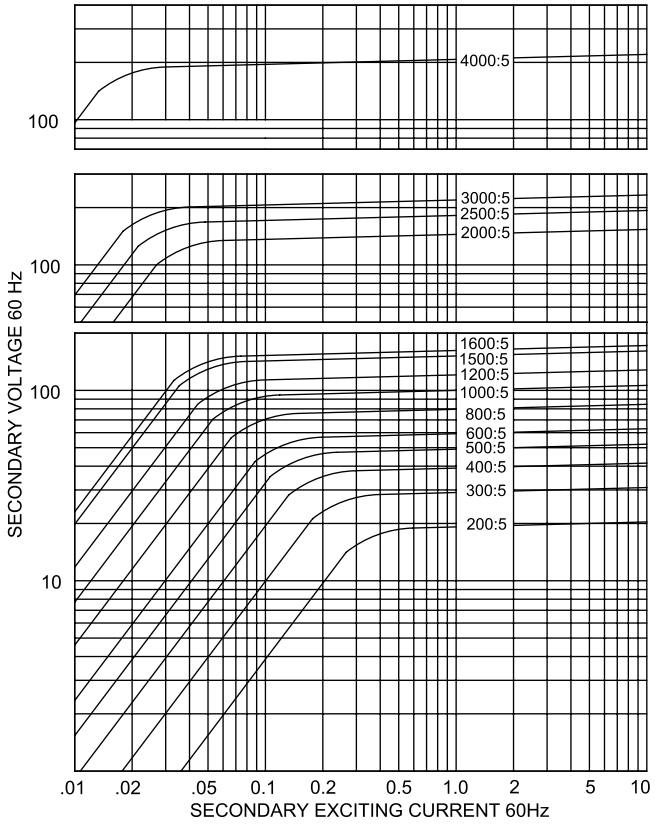

FLEX-CORE®
Div. Morlan & Associates, Inc.
4970 Scioto Darby Rd. Hilliard, Ohio 43026

WWW.FLEX-CORE.COM
sales@flex-core.com

PHONE (614) 889-6152
TECH. ASSISTANCE (614) 876-8308
FAX # (614) 876-8538

CURRENT TRANSFORMERS

RELAY/METER CLASS CURRENT TRANSFORMER *MODEL* 143

FEATURES

- Relaying and Metering Applications
- High Relay Class Models
- UL Recognized
- Window I.D. - 7.31"

600V CLASS

® E93779 ® LR89403



APPLICATIONS

- Over or Under Current Relays
- Metering
- Ability to drive longer wire runs
- Zero-Sequence Ground Fault Relays

SPECIFICATIONS

Frequency..... 50-400Hz
Insulation class.....0.6kV, 10kV BIL Full Wave
Secondary Terminals.....Brass Screws No. 10-32
Weight .....Approximately 60 Lbs.
Optional Mounting Bracket ..... P/N 0221B00775
***Approved for Revenue Metering by Industry Canada AE-0642**
Manufactured to meet the requirements of ANSI/IEEE C57.13

APPLICATION AND ORDERING DATA

CATALOG NUMBER	CURRENT RATIO	RELAY CLASS	ANSI METERING CLASS AT 60Hz					SECONDARY WINDING RESISTANCE (Ω @75°C)	CONTINUOUS THERMAL RATING FACTOR	
			B0.1	B0.2	B0.5	B0.9	B1.8		@30°C	@55°C
143-500	50:5	C20	4.8	4.8	-	-	-	0.014	2.0	2.0
143-750	75:5	C20	2.4	2.4	-	-	-	0.042	2.0	2.0
143-101	100:5	C20	1.2	2.4	4.8	4.8	-	0.056	2.0	2.0
143-151	150:5*	C50	0.6	0.6	1.2	2.4	4.8	0.121	2.0	2.0
143-201	200:5*	C50	0.3	0.3	0.6	1.2	2.4	0.161	2.0	2.0
143-251	250:5*	C50	0.3	0.3	0.6	1.2	2.4	0.175	2.0	2.0
143-301	300:5*	C100	0.3	0.3	0.3	0.6	1.2	0.241	2.0	2.0
143-401	400:5*	C100	0.3	0.3	0.3	0.3	0.6	0.322	2.0	2.0
143-501	500:5*	C100	0.3	0.3	0.3	0.6	0.6	0.441	2.0	2.0
143-601	600:5*	C200	0.3	0.3	0.3	0.3	0.3	0.530	2.0	1.5
143-751	750:5*	C200	0.3	0.3	0.3	0.3	0.3	0.662	2.0	1.5
143-801	800:5*	C200	0.3	0.3	0.3	0.3	0.3	0.706	2.0	1.5
143-102	1000:5*	C200	0.3	0.3	0.3	0.3	0.3	0.883	1.5	1.33
143-122	1200:5*	C400	0.3	0.3	0.3	0.3	0.3	1.059	1.5	1.0
143-152	1500:5*	C400	0.3	0.3	0.3	0.3	0.3	1.324	1.5	1.0
143-162	1600:5*	C400	0.3	0.3	0.3	0.3	0.3	1.413	1.33	1.0
143-202	2000:5*	C400	0.3	0.3	0.3	0.3	0.3	1.678	1.33	1.0
143-252	2500:5*	C400	0.3	0.3	0.3	0.3	0.3	2.097	1.0	0.8
143-302	3000:5*	C800	0.3	0.3	0.3	0.3	0.3	2.516	1.0	0.8
143-322	3200:5*	C800	0.3	0.3	0.3	0.3	0.3	2.684	1.0	0.8
143-352	3500:5*	C800	0.3	0.3	0.3	0.3	0.3	2.936	1.0	0.8
143-402	4000:5*	C800	0.3	0.3	0.3	0.3	0.3	3.355	1.0	0.6
143-502	5000:5*	C800	0.3	0.3	0.3	0.3	0.3	3.983	1.0	0.6
143-602	6000:5*	C800	0.3	0.3	0.3	0.3	0.3	4.780	0.8	0.6

EXCITATION CURVE

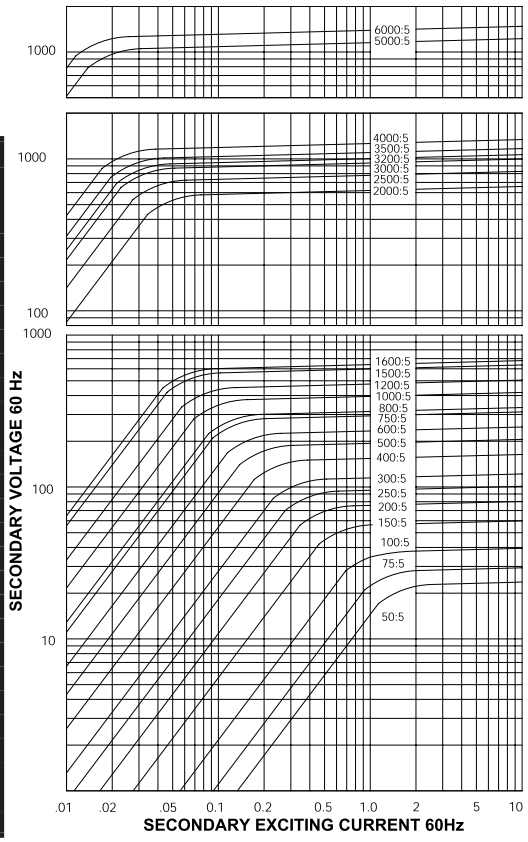

DIMENSIONS

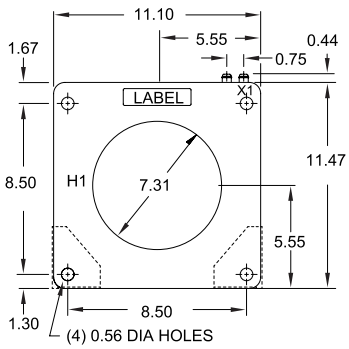

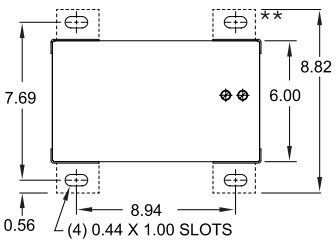

** Shown with optional mounting brackets: P/N #0221B00775

All Dimensions In Inches

FLEX-CORE®
Div. Morlan & Associates, Inc.
4970 Scioto Darby Rd. Hilliard, Ohio 43026
WWW.FLEX-CORE.COM
sales@flex-core.com
PHONE (614) 889-6152
TECH. ASSISTANCE (614) 876-8308
FAX # (614) 876-8538

CURRENT TRANSFORMERS

RELAY CLASS CURRENT TRANSFORMERS *MODEL* 143MR

MULTI-RATIO UNITS AVAILABLE IN THE 143 MODEL (143MR)													
CATALOG NUMBER	MULTIPLE CURRENT RATIOS										RELAY CLASS	CONTINUOUS THERMAL RATING FACTOR	
												@30°C	@55°C
143-601MR	50:5	100:5	150:5	200:5	250:5	300:5	400:5	450:5	500:5	600:5	C200	2.0	1.5
143-122MR	100:5	200:5	300:5	400:5	500:5	600:5	800:5	900:5	1000:5	1200:5	C400	1.5	1.0
143-202MR	300:5	400:5	500:5	800:5	1100:5	1200:5	1500:5	1600:5	2000:5	-	C400	1.33	1.0
143-302MR	300:5	500:5	800:5	1000:5	1200:5	1500:5	2000:5	2200:5	2500:5	3000:5	C800	1.0	0.8
143-402MR	500:5	1000:5	1500:5	2000:5	2500:5	3000:5	3500:5	4000:5	-	-	C800	1.0	0.6
143-502MR	500:5	1000:5	1500:5	2000:5	2500:5	3000:5	3500:5	4000:5	5000:5	-	C800	1.0	0.6

EXCITATION CURVES

Model 143-601MR 600:5MR

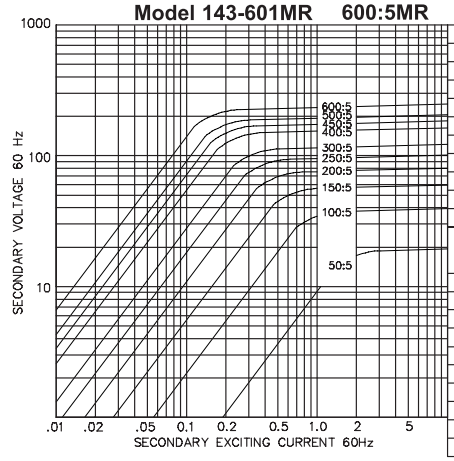

RATIO	TAP
50:5	X2–X3
100:5	X1–X2
150:5	X1–X3
200:5	X4–X5
250:5	X3–X4
300:5	X2–X4
400:5	X1–X4
450:5	X3–X5
500:5	X2–X5
600:5	X1–X5

RATIO	DCR OHMS @75°C
50:5	0.028
100:5	0.056
150:5	0.084
200:5	0.111
250:5	0.139
300:5	0.167
400:5	0.223
450:5	0.251
500:5	0.279
600:5	0.334

Model 143-122MR 1200:5MR

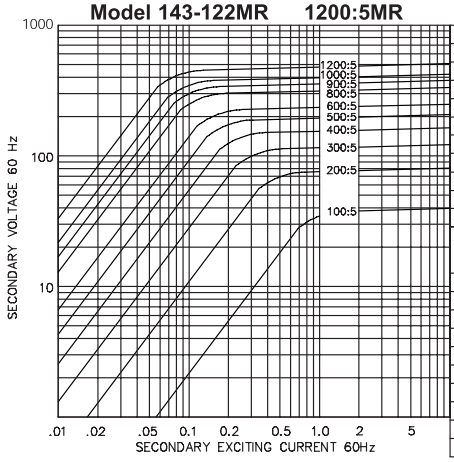

RATIO	TAP
100:5	X2–X3
200:5	X1–X2
300:5	X1–X3
400:5	X4–X5
500:5	X3–X4
600:5	X2–X4
800:5	X1–X4
900:5	X3–X5
1000:5	X2–X5
1200:5	X1–X5

RATIO	DCR OHMS @75°C
100:5	0.088
200:5	0.177
300:5	0.265
400:5	0.353
500:5	0.441
600:5	0.530
800:5	0.706
900:5	0.795
1000:5	0.883
1200:5	1.059

Model 143-202MR 2000:5MR

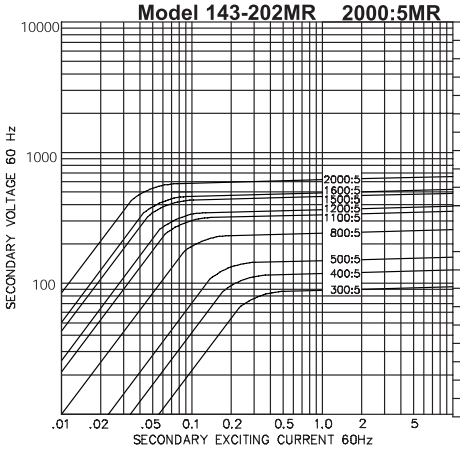

RATIO	TAP
300:5	X3–X4
400:5	X1–X2
500:5	X4–X5
800:5	X2–X3
1100:5	X2–X4
1200:5	X1–X3
1500:5	X1–X4
1600:5	X2–X5
2000:5	X1–X5

RATIO	DCR OHMS @75°C
300:5	0.201
400:5	0.268
500:5	0.334
800:5	0.535
1100:5	0.736
1200:5	0.803
1500:5	1.003
1600:5	1.070
2000:5	1.338

Model 143-302MR 3000:5MR

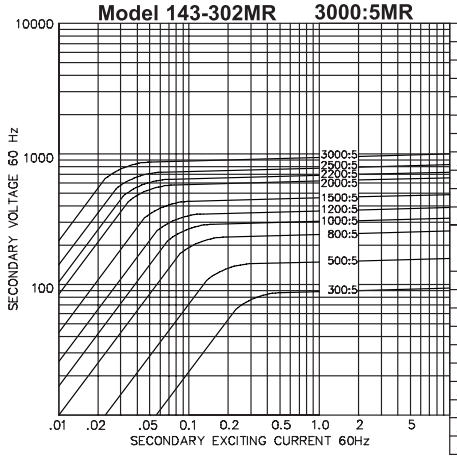

RATIO	TAP
300:5	X3–X4
500:5	X4–X5
800:5	X3–X5
1000:5	X1–X2
1200:5	X2–X3
1500:5	X2–X4
2000:5	X2–X5
2200:5	X1–X3
2500:5	X1–X4
3000:5	X1–X5

RATIO	DCR OHMS @75°C
300:5	0.201
500:5	0.334
800:5	0.535
1000:5	0.669
1200:5	0.803
1500:5	1.003
2000:5	1.338
2200:5	1.471
2500:5	1.672
3000:5	2.007

Model 143-402MR 4000:5MR

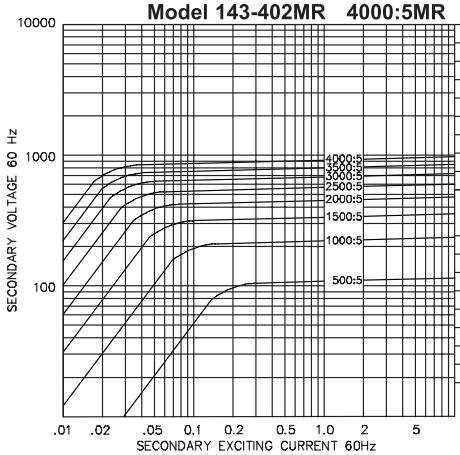

RATIO	TAP
500:5	X1–X2
1000:5	X3–X4
1500:5	X2–X3
2000:5	X1–X3
2500:5	X2–X4
3000:5	X1–X4
3500:5	X2–X5
4000:5	X1–X5

RATIO	DCR OHMS @75°C
500:5	0.398
1000:5	0.797
1500:5	1.195
2000:5	1.593
2500:5	1.991
3000:5	2.390
3500:5	2.788
4000:5	3.186

Model 143-502MR 5000:5MR

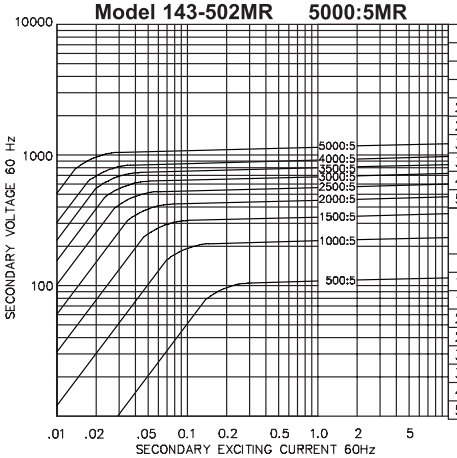

RATIO	TAP
500:5	X2–X3
1000:5	X4–X5
1500:5	X1–X2
2000:5	X3–X4
2500:5	X2–X4
3000:5	X3–X5
3500:5	X2–X5
4000:5	X1–X4
5000:5	X1–X5

RATIO	DCR OHMS @75°C
500:5	0.398
1000:5	0.797
1500:5	1.195
2000:5	1.593
2500:5	1.991
3000:5	2.390
3500:5	2.788
4000:5	3.186
5000:5	3.983

FLEX-CORE®
Div. Morlan & Associates, Inc.
4970 Scioto Darby Rd. Hilliard, Ohio 43026

WWW.FLEX-CORE.COM
sales@flex-core.com

PHONE (614) 889-6152
TECH. ASSISTANCE (614) 876-8308
FAX # (614) 876-8538

CURRENT TRANSFORMERS

RELAY/METER CLASS CURRENT TRANSFORMER *MODEL* 780

FEATURES

- Relaying and Metering Applications
- High Relay Class Models
- UL Recognized
- Window I.D. - 6.50"

600V CLASS

c UL us E238872 245941



SPECIFICATIONS

Frequency..... 50-400Hz
Insulation class.....0.6kV, 10kV BIL Full Wave
Secondary Terminals..... Brass Studs No. 18-32 UNC with one flatwasher, lockwasher, and one nut each.
Weight .....Approximately 30 Lbs.
Manufactured to meet the requirements of ANSI/IEEE C57.13

APPLICATION AND ORDERING DATA

CATALOG NUMBER	CURRENT RATIO	RELAY CLASS	ANSI METERING CLASS AT 60Hz					CONTINUOUS THERMAL RATING FACTOR		SECONDARY WINDING RESISTANCE OHMS @75°C
			B0.1	B0.2	B0.5	B0.9	B1.8	@30°C	@55°C	
780-500	50:5	-	4.8	--	--	--	--	2.0	1.5	0.020
780-101	100:5	C10	2.4	2.4	4.8	--	--	2.0	1.5	0.030
780-151	150:5	C20	1.2	1.2	2.4	4.8	--	2.0	1.5	0.043
780-201	200:5	C20	0.6	0.6	1.2	2.4	4.8	2.0	1.5	0.055
780-251	250:5	C20	0.6	0.6	1.2	1.2	2.4	2.0	1.5	0.067
780-301	300:5	C20	0.3	0.6	0.6	1.2	2.4	2.0	1.5	0.079
780-401	400:5	C50	0.3	0.3	0.6	0.6	1.2	2.0	1.5	0.102
780-501	500:5	C50	0.15	0.15	0.3	0.6	0.6	2.0	1.5	0.126
780-601	600:5	C100	0.15	0.15	0.3	0.3	0.6	2.0	1.5	0.150
780-801	800:5	C100	0.15	0.3	0.3	0.3	0.6	2.0	1.5	0.234
780-102	1000:5	C100	0.15	0.15	0.15	0.3	0.3	2.0	1.5	0.291
780-122	1200:5	C200	0.15	0.15	0.15	0.3	0.3	2.0	1.5	0.348
780-152	1500:5	C200	0.15	0.15	0.15	0.15	0.15	1.5	1.33	0.433
780-162	1600:5	C200	0.15	0.15	0.15	0.15	0.15	1.5	1.33	0.461
780-202	2000:5	C200	0.15	0.15	0.15	0.15	0.15	2.0	1.5	0.491
780-252	2500:5	C200	0.15	0.15	0.15	0.3	0.3	1.5	1.33	0.615
780-302	3000:5	C200	0.15	0.15	0.15	0.15	0.3	1.5	1.33	0.738
780-352	3500:5	C200	0.15	0.15	0.15	0.15	0.15	1.5	1.33	0.721
780-402	4000:5	C200	0.15	0.15	0.15	0.15	0.15	1.0	--	1.035
780-502	5000:5	C200	0.15	0.15	0.15	0.15	0.15	1.0	--	2.040
780-602	6000:5	C200	0.15	0.15	0.15	0.15	0.15	0.8	--	2.463

DIMENSIONS

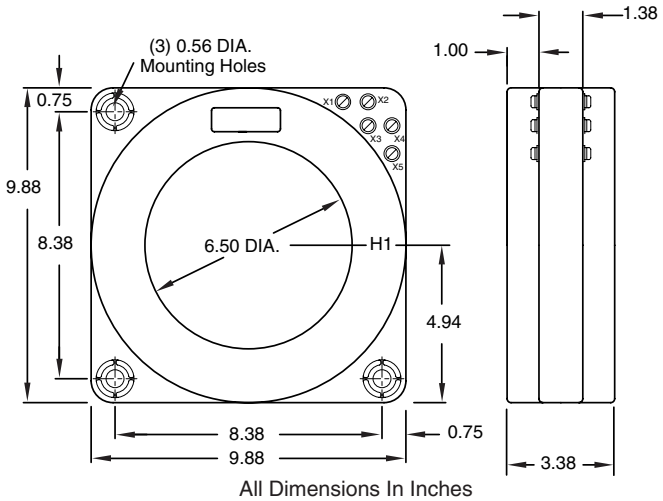

All Dimensions In Inches

FLEX-CORE®
Div. Morlan & Associates, Inc.
4970 Scioto Darby Rd. Hilliard, Ohio 43026
WWW.FLEX-CORE.COM
sales@flex-core.com
PHONE (614) 889-6152
TECH. ASSISTANCE (614) 876-8308
FAX # (614) 876-8538

CURRENT TRANSFORMERS

RELAY/METER CLASS CURRENT TRANSFORMER *MODEL* 780

EXCITATION CURVE

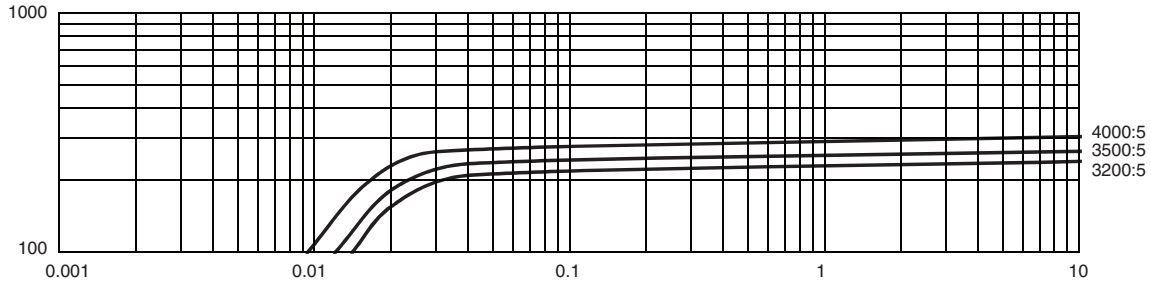

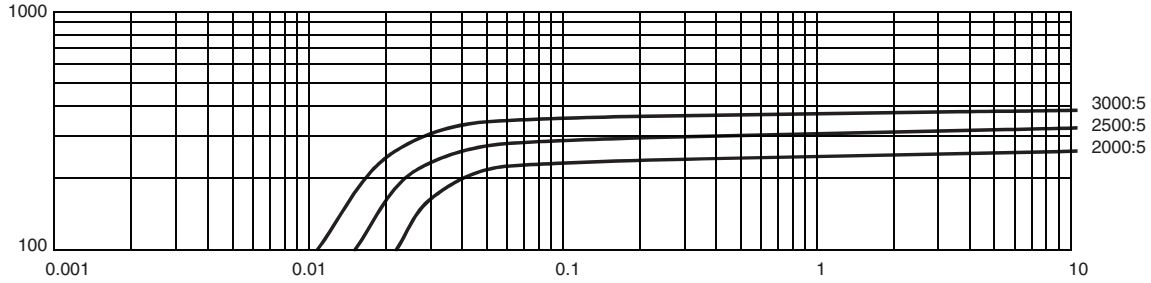

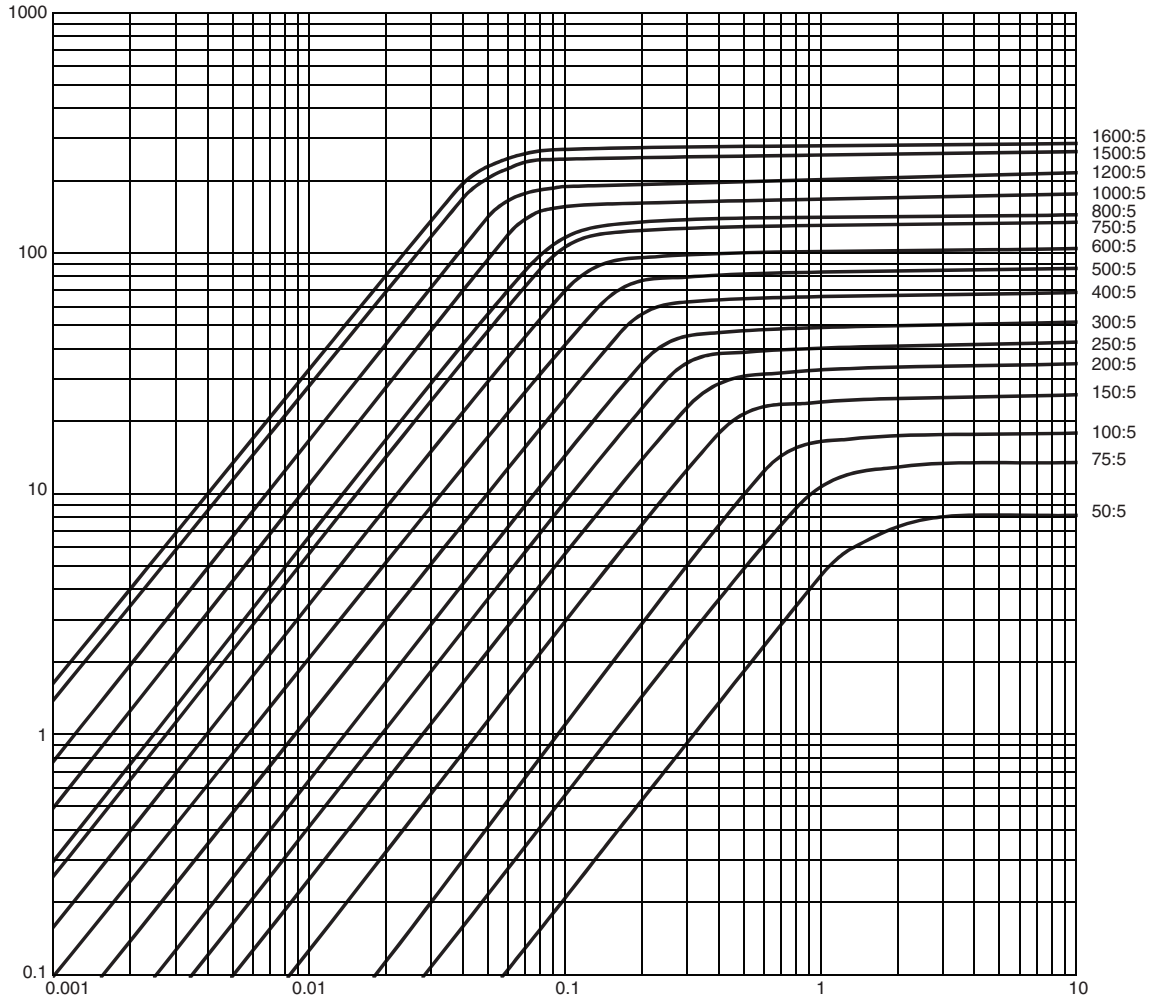

FLEX-CORE®
Div. Morlan & Associates, Inc.
4970 Scioto Darby Rd. Hilliard, Ohio 43026

WWW.FLEX-CORE.COM
sales@flex-core.com

PHONE (614) 889-6152
TECH. ASSISTANCE (614) 876-8308
FAX # (614) 876-8538

Revision: 02/19/18, 12:24:20 PM

CURRENT TRANSFORMERS

MULTI-RATIO CURRENT TRANSFORMER — *MODEL* 781MR

MULTI-RATIO

FEATURES

- UL Recognized
- Window I.D. - 6.5"
- Relaying Applications
- Fits Many Switchgear Applications

® E23887 ® 245941



600V CLASS

SPECIFICATIONS

Frequency 50-400Hz
Insulation Class ..... 0.6kV, 10kV BIL Full Wave
Terminals ..... Female Brass No. 10-32 UNC with one flat washer, lock washer, and one brass pan head screw.
Weight ..... Approximately 31 Lbs.

Manufactured to meet the requirements of ANSI/IEEE C57.13

APPLICATION AND ORDERING DATA

CATALOG NUMBER	MULTIPLE CURRENT RATIOS										RELAY CLASS	CONTINUOUS THERMAL RATING FACTOR	
												@30°C	@55°C
781-601MR	50:5	100:5	150:5	200:5	250:5	300:5	400:5	450:5	500:5	600:5	C100	2.0	1.5
781-122MR	100:5	200:5	300:5	400:5	500:5	600:5	800:5	900:5	1000:5	1200:5	C200	2.0	1.5
781-202MR	300:5	400:5	500:5	800:5	1100:5	1200:5	1500:5	1600:5	2000:5	-	C200	2.0	1.5
781-302MR	300:5	500:5	800:5	1000:5	1200:5	1500:5	2000:5	2200:5	2500:5	3000:5	C200	1.5	1.33
781-402MR	500:5	1000:5	1500:5	2000:5	2500:5	3000:5	3500:5	4000:5	-	-	C200	1.0	0.8

DIMENSIONS

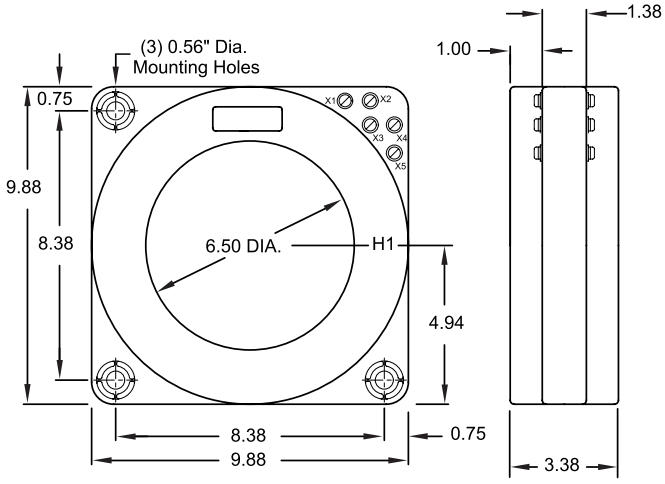

All Dimensions In Inches

EXCITATION CURVE

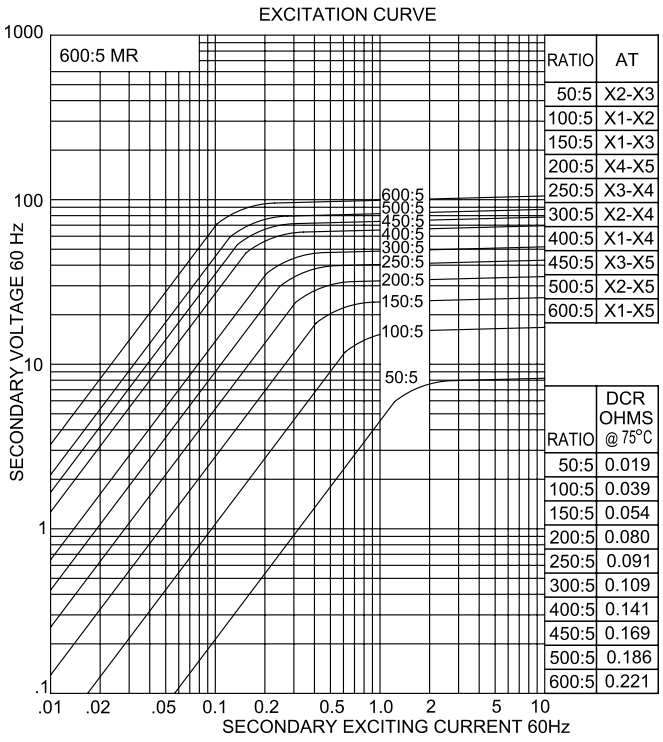

RATIO	AT
50:5	X2-X3
100:5	X1-X2
150:5	X1-X3
200:5	X4-X5
250:5	X3-X4
300:5	X2-X4
400:5	X1-X4
450:5	X3-X5
500:5	X2-X5
600:5	X1-X5

RATIO	DCR OHMS @ 75°C
50:5	0.019
100:5	0.039
150:5	0.054
200:5	0.080
250:5	0.091
300:5	0.109
400:5	0.141
450:5	0.169
500:5	0.186
600:5	0.221

CONNECTIONS

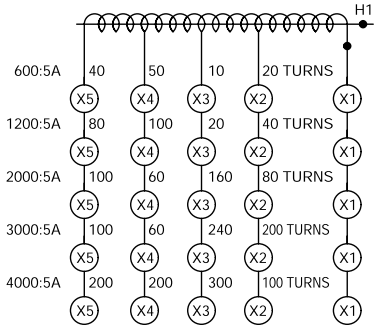

FLEX-CORE®
Div. Morlan & Associates, Inc.
4970 Scioto Darby Rd. Hilliard, Ohio 43026
WWW.FLEX-CORE.COM
sales@flex-core.com
PHONE (614) 889-6152
TECH. ASSISTANCE (614) 876-8308
FAX # (614) 876-8538

CURRENT TRANSFORMERS

EXCITATION CURVES — *MODEL* 781MR

MODEL 781-122MR

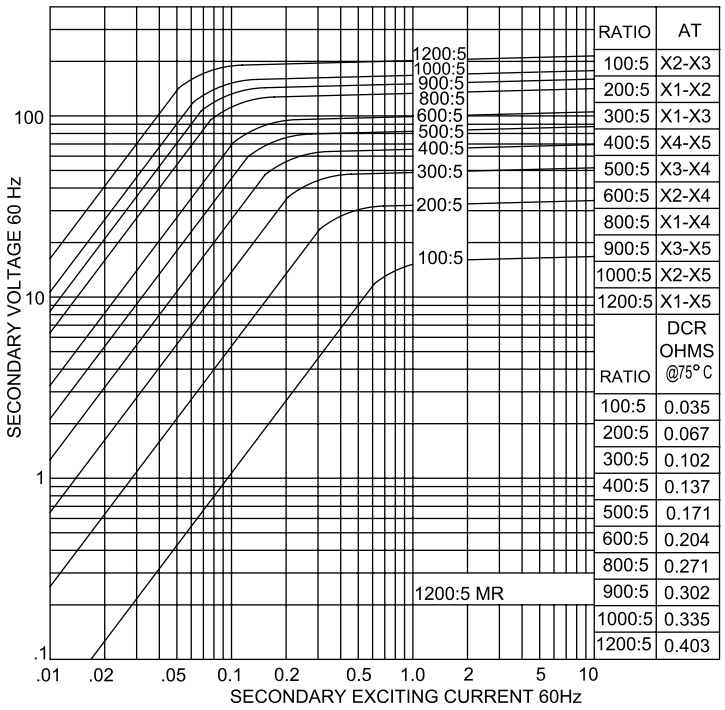

RATIO	AT
100:5	X2-X3
200:5	X1-X2
300:5	X1-X3
400:5	X4-X5
500:5	X3-X4
600:5	X2-X4
800:5	X1-X4
900:5	X3-X5
1000:5	X2-X5
1200:5	X1-X5

RATIO	DCR OHMS @75° C
100:5	0.035
200:5	0.067
300:5	0.102
400:5	0.137
500:5	0.171
600:5	0.204
800:5	0.271
900:5	0.302
1000:5	0.335
1200:5	0.403

MODEL 781-202MR

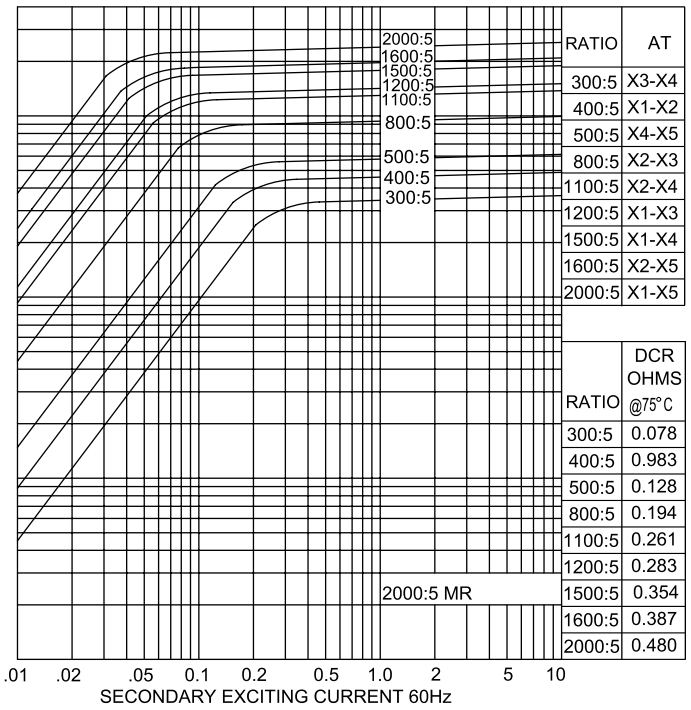

RATIO	AT
300:5	X3-X4
400:5	X1-X2
500:5	X4-X5
800:5	X2-X3
1100:5	X2-X4
1200:5	X1-X3
1500:5	X1-X4
1600:5	X2-X5
2000:5	X1-X5

RATIO	DCR OHMS @75°C
300:5	0.078
400:5	0.983
500:5	0.128
800:5	0.194
1100:5	0.261
1200:5	0.283
1500:5	0.354
1600:5	0.387
2000:5	0.480

MODEL 781-302MR

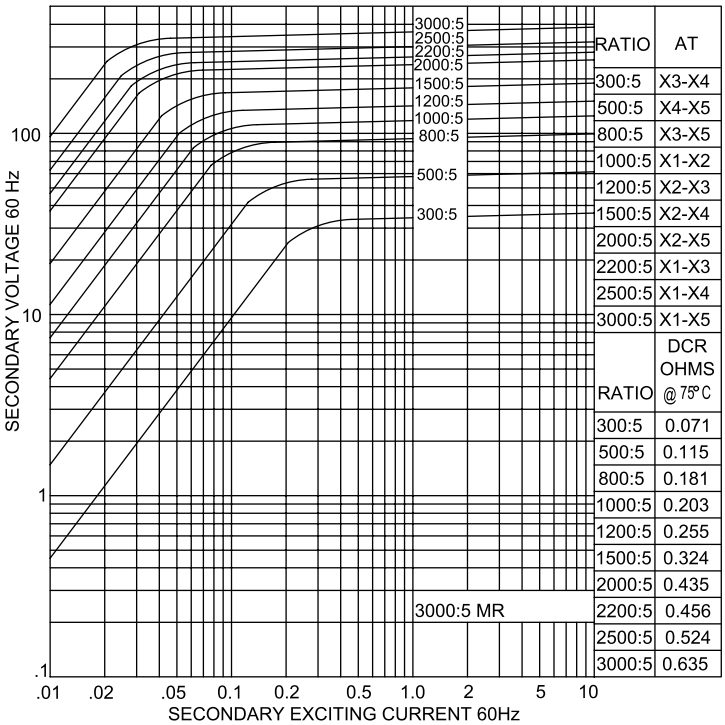

RATIO	AT
300:5	X3-X4
500:5	X4-X5
800:5	X3-X5
1000:5	X1-X2
1200:5	X2-X3
1500:5	X2-X4
2000:5	X2-X5
2200:5	X1-X3
2500:5	X1-X4
3000:5	X1-X5

RATIO	DCR OHMS @ 75°C
300:5	0.071
500:5	0.115
800:5	0.181
1000:5	0.203
1200:5	0.255
1500:5	0.324
2000:5	0.435
2200:5	0.456
2500:5	0.524
3000:5	0.635

MODEL 781-402MR

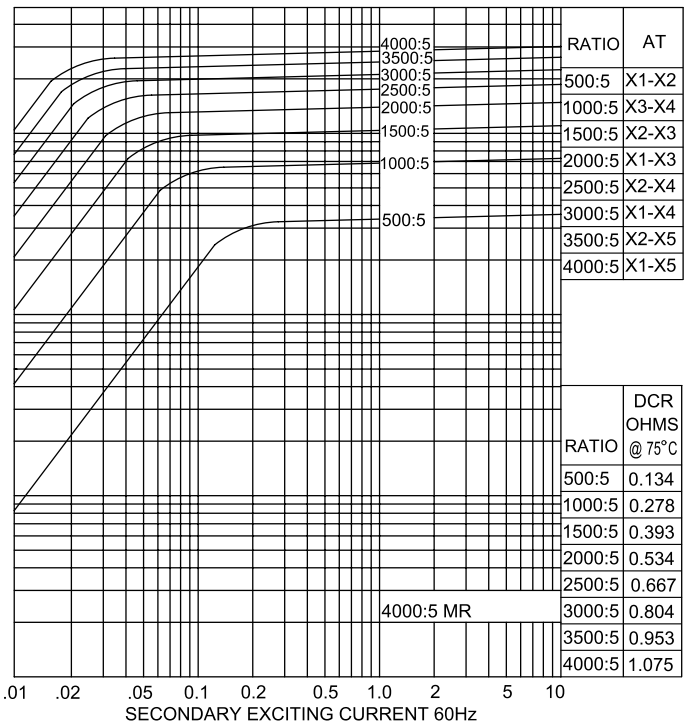

RATIO	AT
500:5	X1-X2
1000:5	X3-X4
1500:5	X2-X3
2000:5	X1-X3
2500:5	X2-X4
3000:5	X1-X4
3500:5	X2-X5
4000:5	X1-X5

RATIO	DCR OHMS @ 75°C
500:5	0.134
1000:5	0.278
1500:5	0.393
2000:5	0.534
2500:5	0.667
3000:5	0.804
3500:5	0.953
4000:5	1.075

FLEX-CORE®
Div. Morlan & Associates, Inc.
4970 Scioto Darby Rd. Hilliard, Ohio 43026

WWW.FLEX-CORE.COM
sales@flex-core.com

PHONE (614) 889-6152
TECH. ASSISTANCE (614) 876-8308
FAX # (614) 876-8538

CURRENT TRANSFORMERS

RELAY/METER CURRENT TRANSFORMER *MODEL* 147

FEATURES

- Relaying and Metering Applications
- Short time thermal rating factor: 75 X Rated Primary Current for 1 second
- Window I.D.-10.00"
- FOR INDOOR USE ONLY

600V CLASS

c UL us E93779



SPECIFICATIONS

Frequency 50-400Hz
Insulation Class ..... 0.6kV, 10kV BIL Full Wave
Terminals ..... Brass Screws No. 10-32 with one flat washer and lock washer
Weight ..... Approximately 50 Lbs.

Manufactured to meet the requirements of ANSI/IEEE C57.13

APPLICATION AND ORDERING DATA

CATALOG NUMBER	CURRENT RATIO	RELAY CLASS	ANSI METERING CLASS AT 60Hz					RATING FACTOR AT 30°C AMBIENT	SECONDARY WINDING RESISTANCE (Ω @ 75°C)
			B0.1	B0.2	B0.5	B0.9	B1.8		
147-202	2000:5	C200	0.3	0.3	0.3	0.3	0.3	2.0	0.414
147-252	2500:5	C200	0.3	0.3	0.3	0.3	0.3	2.0	0.447
147-302	3000:5	C200	0.3	0.3	0.3	0.3	0.3	2.0	0.495
147-402	4000:5	C200	0.3	0.3	0.3	0.3	0.3	2.0	0.707
147-502	5000:5	C200	0.3	0.3	0.3	0.3	0.3	2.0	0.745
147-602	6000:5	C400	0.3	0.3	0.3	0.3	0.3	1.5	0.975
147-802	8000:5	C400	0.3	0.3	0.3	0.3	0.3	1.0	1.970
147-103	10000:5	C400	0.3	0.3	0.3	0.3	0.3	1.0	2.190

DIMENSIONS

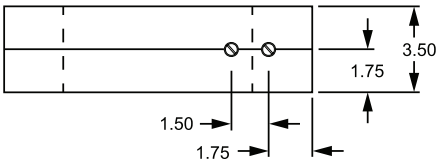

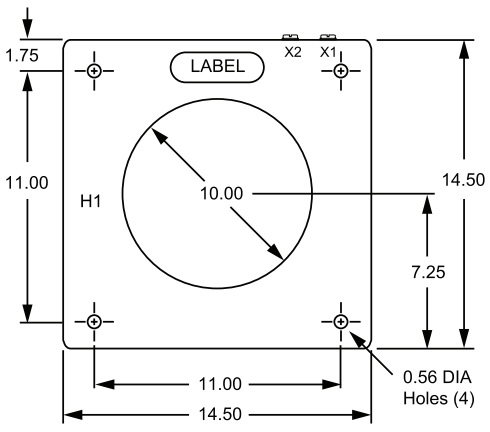

All Dimensions In Inches

FLEX-CORE®
Div. Morlan & Associates, Inc.
4970 Scioto Darby Rd. Hilliard, Ohio 43026

WWW.FLEX-CORE.COM
sales@flex-core.com

PHONE (614) 889-6152
TECH. ASSISTANCE (614) 876-8308
FAX # (614) 876-8538

CURRENT TRANSFORMERS

BAR TYPE CURRENT TRANSFORMER — *MODEL* CTM-0C

SPECIFICATIONS

600V CLASS



Designed for indoor service.
Suitable for operating meters, instruments, relays and control devices.
Weight .....Approximately 7 Lbs.
Insulation Level..... 0.6kV, 10kV BIL Full Wave
Frequency.....60Hz
Manufactured to meet the requirements of ANSI/IEEE C57.13

CTM-0C SINGLE BAR DATA TABLE				
CATALOG NUMBER	CURRENT RATIO (AMPS) PRI:SEC	IEEE ACCURACY CLASS, 60HZ BURDEN PER IEEE B0.1 TO B0.9	CONTINUOUS THERMAL CURRENT RATING FACTOR @30°C AMB.	APPROVAL NUMBER FROM CCAC
430-001	5:5*	0.3	1.5	-
430-002	10:5*	0.3	1.5	-
430-003	15:5*	0.3	1.5	-
430-004	20:5*	0.3	1.5	-
430-005	25:5*	0.3	1.5	-
430-006	30:5*	0.3	1.5	-
430-007	40:5*	0.3	1.5	-
430-008	50:5	0.3	1.5	T172-1
430-009	60:5	0.3	1.5	T172-1
430-010	75:5	0.3	1.5	T172-1
430-011	100:5	0.3	1.5	T172-1
430-012	150:5	0.3	1.5	T172-1
430-013	200:5	0.3	1.5	T172-1
430-014	250:5	0.3	1.5	T172-1
430-015	300:5	0.3	1.5	T172-1
430-016	400:5	0.3	1.5	T172
430-017	500:5*	0.3	1.5	T-253
430-018	600:5*	0.3	1.5	T-253
430-019	800:5*	0.3	1.5	T-253
430-020	1000:5*	0.3	1.2	T-253
430-021	1200:5*	0.3	1.0	T-253

*For these models please contact factory for availability and approval number from CCAC for revenue metering application.
NOTE: DUAL BAR MODELS AVAILABLE

DIMENSIONS

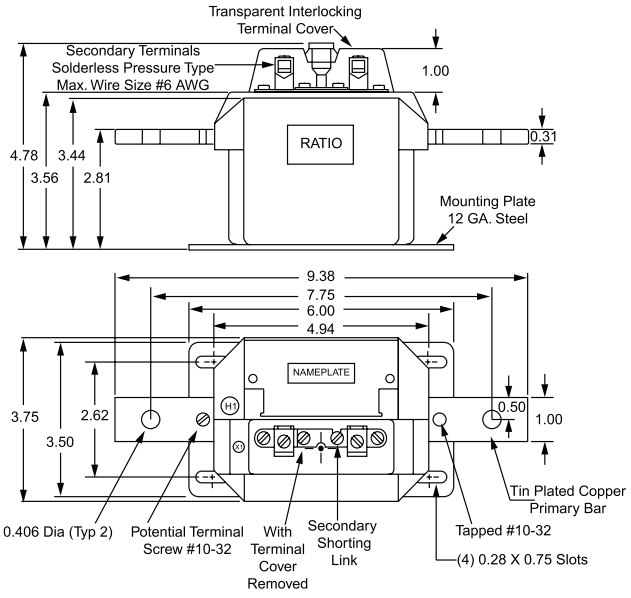

CURRENT RATIO FROM 5:5 TO 400:5

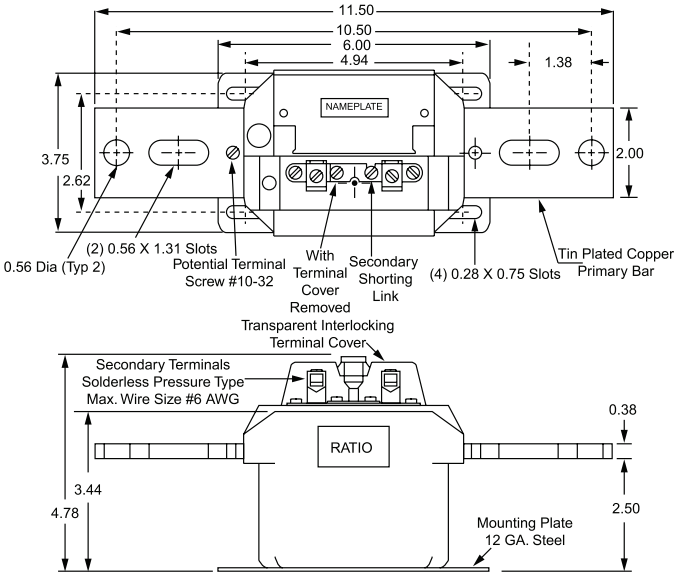

CURRENT RATIO > 400:5

All Dimensions In Inches

FLEX-CORE®
Div. Morlan & Associates, Inc.
4970 Scioto Darby Rd. Hilliard, Ohio 43026
WWW.FLEX-CORE.COM
sales@flex-core.com
PHONE (614) 889-6152
TECH. ASSISTANCE (614) 876-8308
FAX # (614) 876-8538

CURRENT TRANSFORMERS

WOUND PRIMARY CURRENT TRANSFORMER *MODEL* 189

ANSI METERING CLASS: 0.6, B0.2 AT 60HZ

DESCRIPTION

- The Model 189 is a low ratio, wound primary current transformer, suitable for primary currents from 2.5A-100A with 5A outputs.
- To be used with ammeters, watt meters, or transducers.
- UL Recognized

600V CLASS



SPECIFICATIONS

Frequency 50-400Hz
Insulation Class ..... 0.6kV, 10kV BIL Full Wave
Continuous Thermal Rating Factor ..... 1.33@30°C
1.0@55°C
Primary Terminals .... 30:5 and Below ... Brass No. 10-32
40:5 and Up ..... Brass No. 3/8-16
Secondary Terminals ..... Brass Screws No. 8-32
Weight ..... Approximately 0.75 Lb.

Manufactured to meet the requirements of ANSI/IEEE C57.13

c UL us E238872 CSA® 245941 RoHS COMPLIANT MADE IN U.S.A.

DIMENSIONS

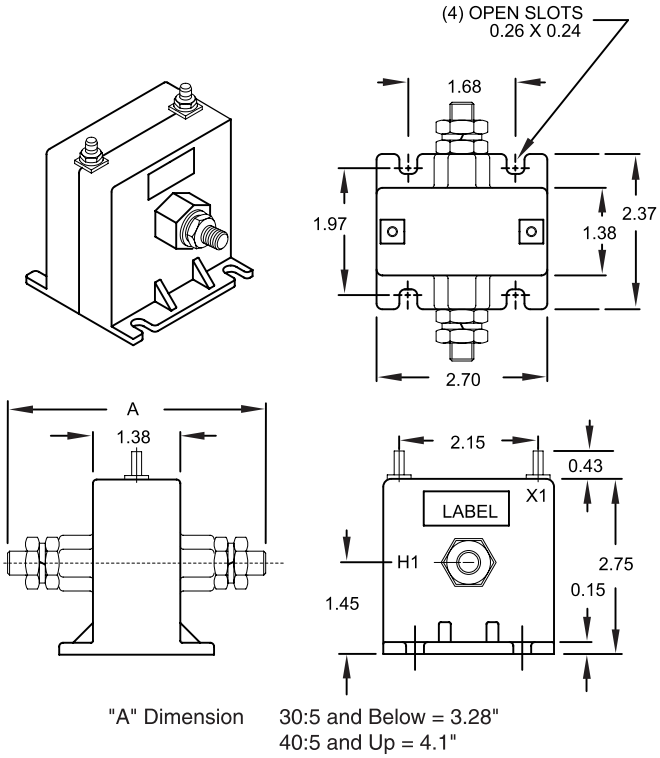

"A" Dimension 30:5 and Below = 3.28"
40:5 and Up = 4.1"

All Dimensions In Inches

CATALOG NUMBER	CURRENT RATIO	ANSI ACCURACY	
		B0.1	B0.2
189-0025	2.5:5	.6	.6
189-005	5:5	.6	.6
189-0075	7.5:5	.6	.6
189-010	10:5	.6	.6
189-015	15:5	.6	.6
189-020	20:5	.6	.6
189-025	25:5	.6	.6
189-030	30:5	.6	.6
189-040	40:5	.6	.6
189-050	50:5	.6	.6
189-060	60:5	.6	.6
189-075	75:5	.6	.6
189-080	80:5	.6	.6
189-101	100:5	.6	.6

FLEX-CORE®
Div. Morlan & Associates, Inc.
4970 Scioto Darby Rd. Hilliard, Ohio 43026
WWW.FLEX-CORE.COM
sales@flex-core.com
PHONE (614) 889-6152
TECH. ASSISTANCE (614) 876-8308
FAX # (614) 876-8538

CURRENT TRANSFORMERS

AUXILIARY & SUMMING CURRENT TRANSFORMER

MODELS
190X, 190XSUM

ANSI METERING CLASS: 0.3, B0.5 AT 60HZ

DESCRIPTION

- The Model 190X is an auxiliary transformer for use in the secondary of main current transformers to change the ratio for metering applications.
- The Model 190XSUM is a summing transformer for use when two, three, four, or five current transformers need to be totalized.
- UL Recognized

SPECIFICATIONS

Frequency 50-400Hz
Continuous Thermal Factor ..... 1.33 at 30°C
1.0 at 55°C
Secondary Terminals ..... Brass Studs No. 8-32
Weight ..... Approximately 4 Lbs.
Optional Mounting Bracket ..... P/N 0221B00777
Insulation Class ..... 0.6kV, 10kV BIL Full Wave

DIMENSIONS

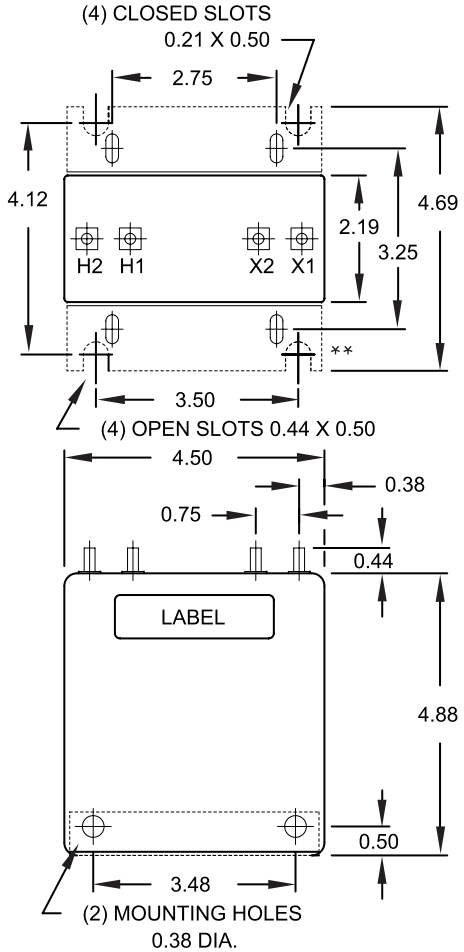

** Shown with optional mounting brackets: P/N #0221B00777
All Dimensions In Inches

600V CLASS



Model 190XSUM-2

E93779 LR89403

Since these units are used in the secondary of another current transformer, they do not have a voltage rating. It is given a 2500Volt - 60Hz Hi Pot. test. It is designed to be used on circuits not to exceed 600 volts-to-ground or between windings.

ORDERING INFORMATION

CATALOG NUMBER	CURRENT RATIO	CATALOG NUMBER	CURRENT RATIO
190X0100	5:0.100	190X6250	5:6.250
190X0200	5:0.200	190X7500	5:7.500
190X0250	5:0.250	190X8000	5:8.000
190X0500	5:0.500	190X10000	5:10.000
190X0625	5:0.625	190X12500	5:12.500
190X1000	5:1.000	190X15000	5:15.000
190X1250	5:1.250	190X1500-5	1.500:5
190X1667	5:1.667	190X1667-5	1.667:5
190X2000	5:2.000	190X2500-5	2.500:5
190X2395	5:2.395	190X2875-5	2.875:5
190X2500	5:2.500	190X7500-5	7.500:5
190X2890	5:2.890	190X10500-5	10.500:5
190X3000	5:3.000	190X0500-1	0.500:1
190X3330	5:3.330	190X0923-1	0.923:1
190X3750	5:3.750	190X0400-10	0.400:10
190X4000	5:4.000	190XSUM-2*	5+5:5
190X5000	5:5.000	190XSUM-3*	5+5+5:5
190X5330	5:5.330	190XSUM-4*	5+5+5+5:5
		190XSUM-5*	5+5+5+5+5:5

*Note: All current transformers to be totalized must have the same ratio. Unequal line current ratios can be totalized by special order only.

FLEX-CORE®
Div. Morlan & Associates, Inc.
4970 Scioto Darby Rd. Hilliard, Ohio 43026
WWW.FLEX-CORE.COM
sales@flex-core.com
PHONE (614) 889-6152
TECH. ASSISTANCE (614) 876-8308
FAX # (614) 876-8538

CURRENT TRANSFORMERS

MV BAR TYPE CURRENT TRANSFORMER *MODEL* CTWH3-60-T50

FEATURES

- UL Recognized
- Metering and Relay Class (T50)
- Short circuiting secondary terminal cover
- Vacuum cast in polyurethane resin
- FOR INDOOR USE ONLY.

5KV CLASS

Manufactured to meet the requirements of ANSI/IEEE C57.13



SPECIFICATIONS

c UL us E145172 ® LR89403

Frequency.....50-400Hz
Insulation Level..... 5.6kV, 60kV BIL Full Wave
Continuous Thermal Current Rating Factor
1.50 at 30°C Amb., 1.33 at 55°C amb.

Except
250:5 ..... 1.00 at 30°C Amb., 0.85 at 55°C Amb.
150:5 and 600:5 ..... 1.33 at 30°C Amb., 1.00 at 55°C Amb.

Primary Terminals..... 1/2-13 Bolts with one Belleville washer
Secondary Terminals ..... Brass Studs No. 10-32 one flat washer,lock washer and regular nut
Weight .....20 Lbs.

APPLICATION AND ORDERING DATA

CATALOG NUMBER	CURRENT RATIO	RELAY CLASS	ANSI METERING CLASS AT 60Hz					**THERMAL CURRENT RATING 1 SECOND RMS AMPS
			B0.1	B0.2	B0.5	B0.9	B1.8	
CTWH3-60-T50-050	5:5	T50	0.3	0.3	0.3	0.6	1.2	375
CTWH3-60-T50-100	10:5	T50	0.3	0.3	0.3	0.6	1.2	1000
CTWH3-60-T50-150	15:5	T50	0.3	0.3	0.3	0.6	1.2	1690
CTWH3-60-T50-200	20:5	T50	0.3	0.3	0.3	0.6	1.2	1900
CTWH3-60-T50-250	25:5	T50	0.3	0.3	0.3	0.6	1.2	2700
CTWH3-60-T50-300	30:5	T50	0.3	0.3	0.3	0.6	1.2	2700
CTWH3-60-T50-400	40:5	T50	0.3	0.3	0.3	0.6	1.2	4720
CTWH3-60-T50-500	50:5	T50	0.3	0.3	0.3	0.6	1.2	4720
CTWH3-60-T50-750	75:5	T50	0.3	0.3	0.3	0.6	1.2	8630
CTWH3-60-T50-101	100:5	T50	0.3	0.3	0.3	0.6	1.2	8630
CTWH3-60-T50-151	150:5	T50	0.3	0.3	0.3	0.6	1.2	14380
CTWH3-60-T50-201	200:5	T50	0.3	0.3	0.3	0.6	1.2	17250
CTWH3-60-T50-251	250:5	T50	0.3	0.3	0.3	0.6	1.2	17250
CTWH3-60-T50-301	300:5	T50	0.3	0.3	0.3	0.6	1.2	37800
CTWH3-60-T50-401	400:5	T50	0.3	0.3	0.3	0.6	1.2	37800
CTWH3-60-T50-501	500:5	T50	0.3	0.3	0.3	0.6	1.2	37800
CTWH3-60-T50-601	600:5	T50	0.3	0.3	0.3	0.6	1.2	37800

**With a burden of B0.1 or greater connected to the secondary

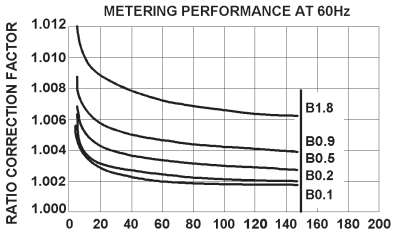

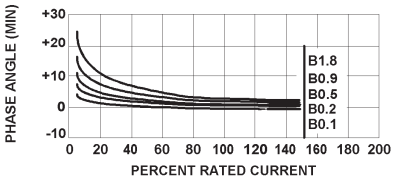

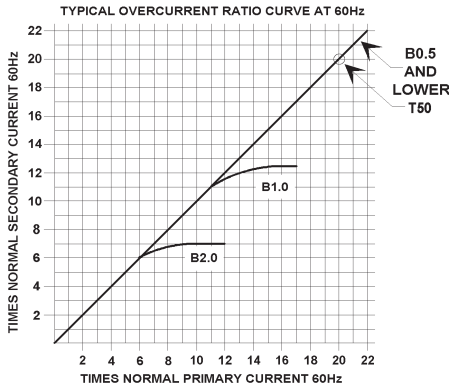

DIMENSIONS

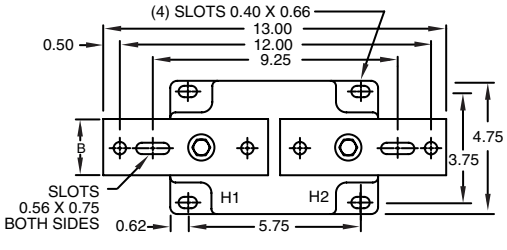

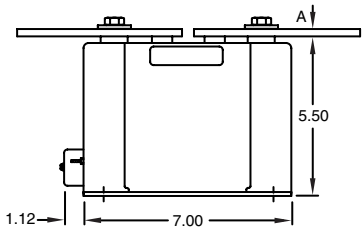

All Dimensions In Inches

BAR SIZES

PRIMARY CURRENT	DIMENSIONS	
	A	B
5 to 150A	0.19	1.50
200 to 600A	0.25	2.00

RECOMMENDED MINIMUM SPACING

A ....Unit to Unit = 0.75" minimum
B ....HV to Ground in Air = 3.00" minimum
Recommended spacings are for guidance only. User needs to set appropriate values to assure performance for high potential test, impulse test, high humidity, partial discharge, high altitude, and other considerations like configuration.

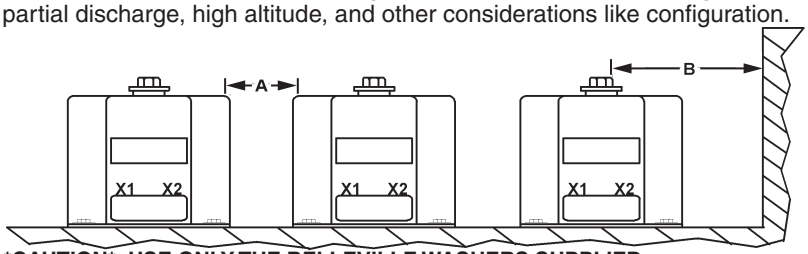

***CAUTION* USE ONLY THE BELLEVILLE WASHERS SUPPLIED. TIGHTEN TO BETWEEN 25 TO 30 FOOT-POUNDS. DO NOT OVER TIGHTEN.**

FLEX-CORE®
Div. Morlan & Associates, Inc.
4970 Scioto Darby Rd. Hilliard, Ohio 43026
WWW.FLEX-CORE.COM
sales@flex-core.com
PHONE (614) 889-6152
TECH. ASSISTANCE (614) 876-8308
FAX # (614) 876-8538

CURRENT TRANSFORMERS

MV BAR TYPE CURRENT TRANSFORMER — *MODEL* JKM-3C

SPECIFICATIONS

Designed for indoor service.
Suitable for operating meters, instruments and control devices.
Insulation Level..... 5kV, 60kV BIL Full Wave
Frequency..... 50-60Hz
Weight .....Approximately 30 Lbs.
Manufactured to meet the requirements of ANSI/IEEE C57.13

5KV CLASS

c UL us E145172 LR89403



APPLICATION AND ORDERING DATA										
CATALOG NUMBER	CURRENT RATIO (AMPS) PRI:SEC	ANSI ACCURACY CLASS, 60Hz			CONTINUOUS THERMAL CURRENT RATING FACTOR		PRIMARY BAR SIZE		ONE SECOND THERMAL LIMIT AMPS	MECH. LIMIT AMPS
		ANSI METER CLASS BURDEN		RELAY CLASS			WIDTH INS.	THICK INS.		
		B0.1 to B0.5	B0.9 to B1.8		@ 30° C	@ 55° C				
SINGLE RATIO										
753X140023	5:5	0.3	0.3	T100	1.5	1.0	1.50	0.188	465	550
753X140024	10:5	0.3	0.3	T100	1.5	1.0	1.50	0.188	930	1100
753X140025	15:5	0.3	0.3	T100	1.5	1.0	1.50	0.188	1470	1650
753X140026	20:5	0.3	0.3	T100	1.5	1.0	1.50	0.188	1850	2200
753X140027	25:5	0.3	0.3	T100	1.5	1.0	1.50	0.188	2300	2750
753X140028	30:5	0.3	0.3	T100	1.5	1.0	1.50	0.188	2450	3300
753X140029	40:5	0.3	0.3	T100	1.5	1.0	1.50	0.188	3700	4400
753X140030	50:5	0.3	0.3	T100	1.5	1.0	1.50	0.188	4600	5500
753X140032	75:5	0.3	0.3	T100	1.5	1.0	1.50	0.188	6400	8250
753X140033	100:5	0.3	0.3	T100	1.5	1.0	1.50	0.188	8600	11000
753X140035	150:5	0.3	0.3	T100	1.5	1.0	1.50	0.188	12800	16500
753X140036	200:5	0.3	0.3	T100	1.5	1.0	2.00	0.25	17300	22000
753X140038	300:5	0.3	0.3	T100	1.5	1.0	2.00	0.25	25700	33000
753X140039	400:5	0.3	0.3	T100	1.5	1.0	2.00	0.25	36000	44000
753X140040	500:5	0.3	0.3	T100	1.33	1.0	2.00	0.38	43100	47000
753X140041	600:5	0.3	0.3	T100	1.5	1.0	2.00	0.38	51500	66000
753X140042	800:5	0.3	0.3	T100	1.33	1.0	2.00	0.38	63300	70500
TAPPED SECONDARY										
753X140016	50/100:5	0.3	---	T50	2.0	1.5	1.50	0.188	4300	11000
		0.3	0.3	T100	1.5	1.0			8600	
753X140017	75/150:5	0.3	---	T50	2.0	1.5	1.50	0.188	6400	16500
		0.3	0.3	T100	1.5	1.0			12800	
753X140018	100/200:5	0.3	---	T50	2.0	1.5	2.00	0.25	8650	22000
		0.3	0.3	T100	1.5	1.0			17300	
753X140019	150/300:5	0.3	---	T50	2.0	1.5	2.00	0.25	13750	33000
		0.3	0.3	T100	1.5	1.0			27500	
753X140020	200/400:5	0.3	---	T50	2.0	1.5	2.00	0.25	18000	44000
		0.3	0.3	T100	1.5	1.0			36000	
753X140021	300/600:5	0.3	---	T50	2.0	1.5	2.00	0.38	25750	66000
		0.3	0.3	T100	1.5	1.0			51500	
753X140022	400/800:5	0.3	---	T50	2.0	1.5	2.00	0.38	31650	70500
		0.3	0.3	T100	1.33	1.0			63300	

DIMENSIONS

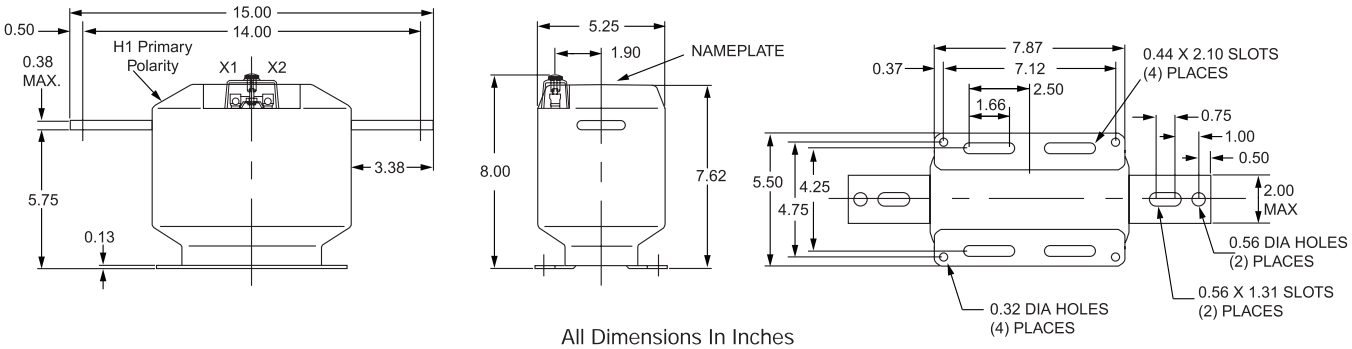

All Dimensions In Inches

FLEX-CORE®
Div. Morlan & Associates, Inc.
4970 Scioto Darby Rd. Hilliard, Ohio 43026

WWW.FLEX-CORE.COM
sales@flex-core.com

PHONE (614) 889-6152
TECH. ASSISTANCE (614) 876-8308
FAX # (614) 876-8538

CURRENT TRANSFORMERS

MV BAR TYPE CURRENT TRANSFORMER *MODEL* JKM-5C

SPECIFICATIONS

15KV CLASS

Designed for indoor service.
Suitable for operating meters, instruments and control devices.
Insulation Level..... 15.5kV, 110kV BIL Full Wave
Frequency..... 50-60Hz
Weight .....Approximately 53 Lbs.

® E145172 LR89403



Manufactured to meet the requirements of ANSI/IEEE C57.13

APPLICATION AND ORDERING DATA										
CATALOG NUMBER	CURRENT RATIO (AMPS) PRI:SEC	ANSI ACCURACY CLASS, 60Hz			CONTINUOUS THERMAL CURRENT RATING FACTOR		PRIMARY BAR SIZE		ONE SECOND THERMAL LIMIT, AMPS	MECH LIMIT, AMPS
		ANSI METER CLASS BURDEN		RELAY CLASS	@30°C	@55°C	WIDTH INS.	THICK INS.		
		B0.1 to B0.5	B0.9 to B1.8							
SINGLE RATIO										
755X142001	5:5	0.3	0.3	T200	1.5	1.33	1.50	0.188	465	625
755X142002	10:5	0.3	0.3	T200	1.5	1.33	1.50	0.188	930	1250
755X142003	15:5	0.3	0.3	T200	1.5	1.33	1.50	0.188	1470	1875
755X142004	20:5	0.3	0.3	T200	1.5	1.33	1.50	0.188	1850	2500
755X142005	25:5	0.3	0.3	T200	1.5	1.33	1.50	0.188	2300	3125
755X142006	30:5	0.3	0.3	T200	1.5	1.33	1.50	0.188	2460	3750
755X142007	40:5	0.3	0.3	T200	1.5	1.33	1.50	0.188	3720	5000
755X142008	50:5	0.3	0.3	T200	1.5	1.33	1.50	0.188	4600	6250
755X142009	75:5	0.3	0.3	T200	1.5	1.33	1.50	0.188	6375	9375
755X142010	100:5	0.3	0.3	T200	1.5	1.33	1.50	0.188	8600	12500
755X142011	150:5	0.3	0.3	T200	1.5	1.33	1.50	0.188	12750	18750
755X142012	200:5	0.3	0.3	T200	1.5	1.33	2.00	0.25	17200	25000
755X142014	300:5	0.3	0.3	T200	1.5	1.33	2.00	0.25	25800	37500
755X142015	400:5	0.3	0.3	T200	1.5	1.33	2.00	0.25	36000	50000
755X142016	500:5	0.3	0.3	T200	1.5	1.33	2.00	0.38	42000	53500
755X142017	600:5	0.3	0.3	T200	1.5	1.33	2.00	0.38	51600	75000
755X142018	800:5	0.3	0.3	T200	1.2	0.85	2.00	0.38	63200	80000
TAPPED SECONDARY										
755X142039	50/100:5	0.3	---	T100	2.0	1.5	1.50	0.188	4300	12500
		0.3	0.3	T200	1.5	1.0			8600	
755X142040	75/150:5	0.3	---	T100	2.0	1.5	1.50	0.188	6375	18750
		0.3	0.3	T200	1.5	1.0			12750	
755X142041	100/200:5	0.3	---	T100	2.0	1.5	2.00	0.25	8600	25000
		0.3	0.3	T200	1.5	1.0			17200	
755X142042	150/300:5	0.3	---	T100	2.0	1.5	2.00	0.25	12900	37500
		0.3	0.3	T200	1.5	1.0			25800	
755X142043	200/400:5	0.3	---	T100	2.0	1.5	2.00	0.25	18000	50000
		0.3	0.3	T200	1.5	1.0			36000	
755X142044	300/600:5	0.3	---	T100	2.0	1.5	2.00	0.38	25800	75000
		0.3	0.3	T200	1.5	1.0			51600	
755X142045	400/800:5	0.3	---	T100	2.0	1.5	2.00	0.38	31600	80000
		0.3	0.3	T200	1.2	0.85			63200	

DIMENSIONS

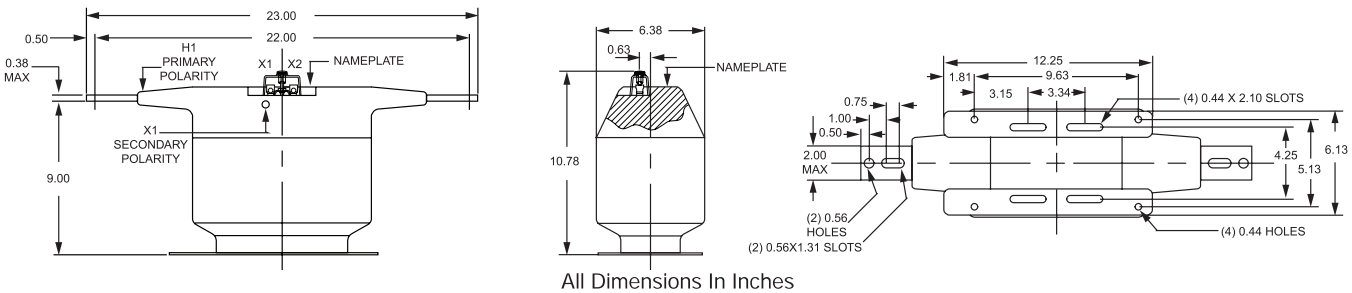

All Dimensions In Inches

FLEX-CORE®
Div. Morlan & Associates, Inc.
4970 Scioto Darby Rd. Hilliard, Ohio 43026

WWW.FLEX-CORE.COM
sales@flex-core.com

PHONE (614) 889-6152
TECH. ASSISTANCE (614) 876-8308
FAX # (614) 876-8538

CURRENT TRANSFORMERS

OUTDOOR CURRENT TRANSFORMER *MODELS* JCK-3, JCK-4

5KV, 8.7KV CLASS



SPECIFICATIONS

Designed for outdoor service.
Suitable for metering applications.
Insulation Level..... (JCK-3) 5kV, 60kV BIL
(JCK-4) 8.7kV, 75kV BIL

ANSI Accuracy Classification, 60Hz

B0.1 and B0.2 all models..... 0.3
B0.5 all models except 753X051001 ..... 0.3
Optional Secondary Conduit Box 9689897001
Weight ..... Approximately 43 Lbs.
Manufactured to meet the requirements of ANSI/IEEE C57.13

APPLICATION AND ORDERING DATA					
CATALOG NUMBER		CURRENT RATIO (AMPS) PRI:SEC	CONTINUOUS THERMAL RATING FACTOR 30°C AMBIENT	MECHANICAL LIMIT; AMPERES	ONE-SECOND THERMAL LIMIT, AMPERES
JCK-3 5,000V BIL 60kV	JCK-4 8,700V BIL 75kV				
753X051001	754X051001	5:5	3.0	3,400	1,900
753X051002	754X051002	10:5	3.0	3,400	1,900
753X051003	754X051003	15:5	3.0	5,100	2,850
753X051004	754X051004	20:5	3.0	6,800	3,825
753X051005	754X051005	25:5	3.0	8,500	4,775
753X051006	754X051006	30:5	3.0	10,200	5,725
753X051007	754X051007	40:5	3.0	13,600	7,650
753X051008	754X051008	50:5	3.0	17,000	9,550
753X051009	754X051009	75:5	3.0	21,250	11,775
753X051010	754X051010	100:5	3.0	34,000	19,125
753X051011	754X051011	150:5	3.0	42,500	23,575
753X051012	754X051012	200:5	3.0	56,100	38,250
753X051013	754X051013	300:5	3.0	85,000	46,750
753X051014	754X051014	400:5	2.5	85,000	47,600
753X051015	754X051015	600:5	2.0	85,000	51,000
753X051016	754X051016	800:5	1.5	85,000	51,000

DIMENSIONS

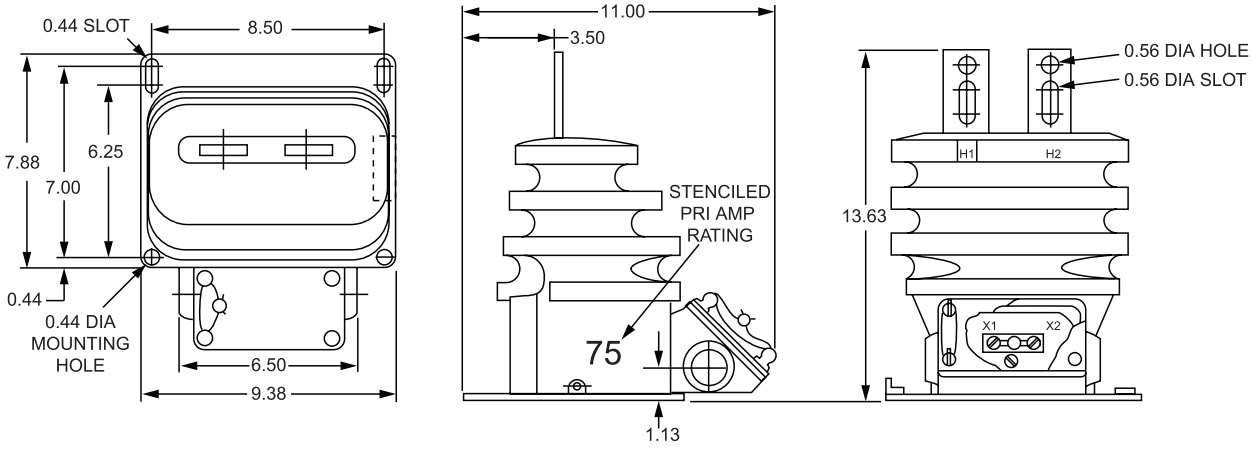

All Dimensions In Inches

FLEX-CORE®
Div. Morlan & Associates, Inc.
4970 Scioto Darby Rd. Hilliard, Ohio 43026
WWW.FLEX-CORE.COM
sales@flex-core.com
PHONE (614) 889-6152
TECH. ASSISTANCE (614) 876-8308
FAX # (614) 876-8538

CURRENT TRANSFORMERS

OUTDOOR CURRENT TRANSFORMER *MODEL* JCK-5C

SPECIFICATIONS

15KV CLASS

Designed for outdoor service.
Suitable for operating meters, instruments, relays and control devices.
Insulation Level.....15.5kV, 110kV BIL per C57.13
Frequency.....60Hz
Weight .....Approximately 40 Lbs.



FEATURES

JCK-5C are manufactured utilizing state of the art Automated Pressure Gelation (APG) processes and Hydrophobic Cycloaliphatic Epoxy (HCEP) for the entire line of 15kV outdoor current transformers. Insulation levels meet or exceed those specified in IEEE C57.13 and CSA CAN3-C13. Dimensions meet IEEE C12.11. Superior designs, HCEP epoxy, and APG processes, are combined to produce the highest quality and reliability available in the industry for outdoor applications.

Manufactured to meet the requirements of ANSI/IEEE C57.13

CATALOG NUMBER	CURRENT RATIO	RELAY CLASS 60Hz	METERING CLASS 60Hz	CONTINUOUS THERMAL RATING FACTOR @30°C
SINGLE RATIO JCK-5C 15kV, 110kV BIL				
755C152001	5:5	C40	0.3 B-0.5	3.0
755C152002	10:5	C40	0.3 B-0.5	3.0
755C152003	15:5	C40	0.3 B-0.5	3.0
755C152004	20:5	C40	0.3 B-0.5	3.0
755C152005	25:5	C40	0.3 B-0.5	3.0
755C152006	30:5	C40	0.3 B-0.5	3.0
755C152007	40:5	C40	0.3 B-0.5	3.0
755C152008	50:5	C40	0.3 B-0.5	3.0
755C152009	75:5	C40	0.3 B-0.5	3.0
755C152010	100:5	C40	0.3 B-0.5	3.0
755C152011	150:5	C40	0.3 B-0.5	3.0
755C152012	200:5	C40	0.3 B-0.5	3.0
755C152013	300:5	C40	0.3 B-0.5	3.0
755C152014	400:5	C40	0.3 B-0.5	3.0
755C152015	600:5	C40	0.3 B-0.5	2.0
755C152016	800:5	C40	0.3 B-0.5	1.5
755C152017	1000:5	C40	0.3 B-0.5	1.2
755C152018	1200:5	C40	0.3 B-0.5	1.0

FLEX-CORE®
Div. Morlan & Associates, Inc.
4970 Scioto Darby Rd. Hilliard, Ohio 43026
WWW.FLEX-CORE.COM
sales@flex-core.com
PHONE (614) 889-6152
TECH. ASSISTANCE (614) 876-8308
FAX # (614) 876-8538

CURRENT TRANSFORMERS

DIMENSIONS — *MODEL* JCK-5C

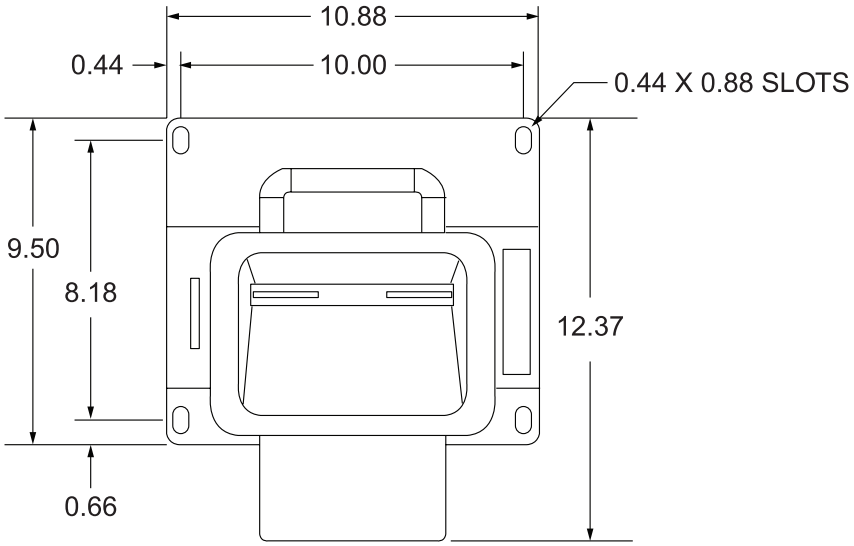

TOP VIEW

DIM. A	RATIO
0.25"	5:5-250:5 A
0.50"	300:5-1200:5 A

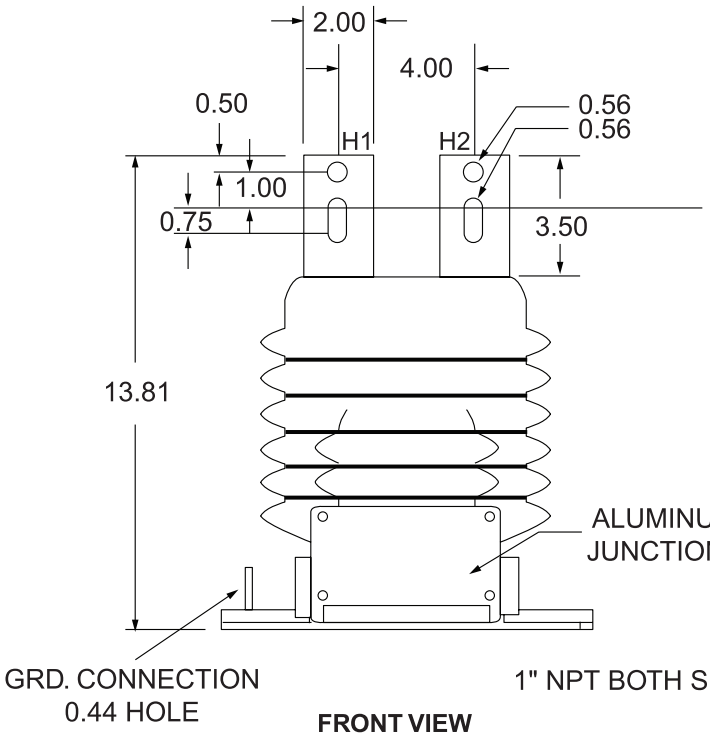

FRONT VIEW

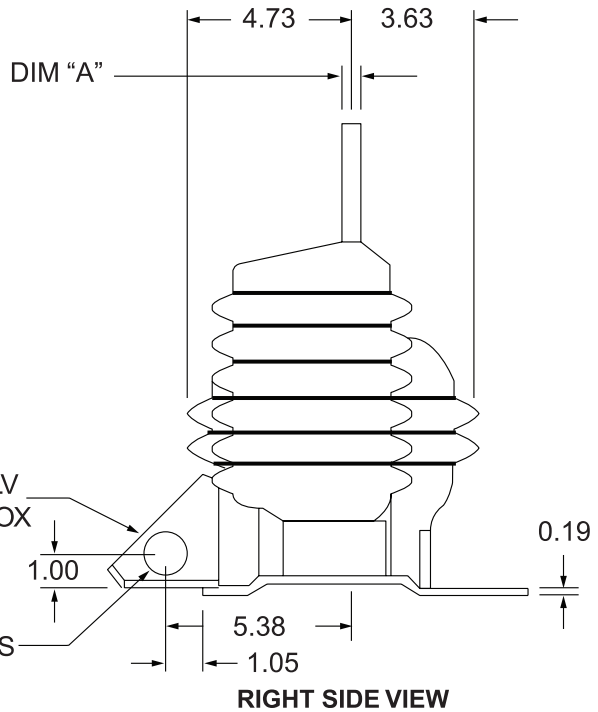

RIGHT SIDE VIEW

All Dimensions In Inches

FLEX-CORE®
Div. Morlan & Associates, Inc.
4970 Scioto Darby Rd. Hilliard, Ohio 43026
WWW.FLEX-CORE.COM
sales@flex-core.com
PHONE (614) 889-6152
TECH. ASSISTANCE (614) 876-8308
FAX # (614) 876-8538

POTENTIAL TRANSFORMERS

LOW VOLTAGE POTENTIAL TRANSFORMER *MODELS* 460, 468



460

FEATURES

600V CLASS

- Frequency 60Hz
- Standard Secondary Voltage ..... 120 Volts
- Insulation Class..... 0.6kV, 10kV BIL

MADE IN U.S.A.

All models on this page UL recognized C USE238872 245941

RoHS COMPLIANT



468

MODEL 460 SPECIFICATIONS

- Accuracy Class..... 0.6W., 1.2X.
- Thermal Rating:
  150 VA at 30°C Amb.
- Terminals are Brass Studs No. 10-32 with one lock washer, flat washer and regular nut.
- The core and coil assembly is encased in a thermoplastic shell and filled with resin.
- These transformers are designed for operation line-to-line. They may also be operated line-to-ground or line-to-neutral, at reduced voltage, (58% of rated volts).
- It is desirable to use a 1.6 amp fuse in the secondary to protect the transformer.
- With two exceptions these transformers are ANSI C57.13 group 1. Those marked * are group 2.
- Each transformer has two plastic terminal covers.
- This page contains a circle diagram for the estimation of the errors for other than rated burdens.
- Approximate Weight ..... 7.75 Lbs. Model 460

MODEL 468 SPECIFICATIONS

- Accuracy Class:
  ± 0.6% at all burdens up to 7.5 VA and ± 1.5% with 20 VA burden.
- Thermal Rating:
  75 VA at 30°C Amb., 50 VA at 55°C Amb. (60Hz only)
- Terminals are Brass Studs No. 10-32 with one lock washer, flat washer, and nut.
- The core and coil assembly is encased in a thermoplastic shell and filled with resin.
- These transformers are designed for operation line-to-line. They may also be operated line-to-ground, or line-to neutral, at reduced voltage (58% of rated volts).
- It is desirable to use the proper size fuse in the secondary to protect the P.T. Use a 0.80 amp fuse with Model 468
- With two exceptions these transformers are ANSI C57.13 group 1. Those marked * are group 2.
- Each transformer has two plastic terminal covers.
- Approximate Weight ..... 4 Lbs. Model 468

APPLICATION AND ORDERING DATA

CATALOG NUMBER	CATALOG NUMBER	VOLTAGE RATING	TURNS RATIO
460-069	468-069	69.3:120	0.58:1
460-120	468-120	120:120	1:1
460-208	468-208	208:120	1.73:1
460-240	468-240	240:120	2:1
460-277	468-277	277:120	2.31:1
460-288	468-288	288:120	2.4:1
460-300	468-300	300:120	2.5:1
460-346	468-346	346:120	2.88:1
*460-480	*468-480	*480:120	4:1
*460-600	*468-600	*600:120	5:1

VOLTAGE TRANSFORMER CIRCLE DIAGRAM FOR 460 SERIES ONLY
THIS GRAPH IS DRAWN FOR A 60Hz 0.6 P.F. SYSTEM LOAD

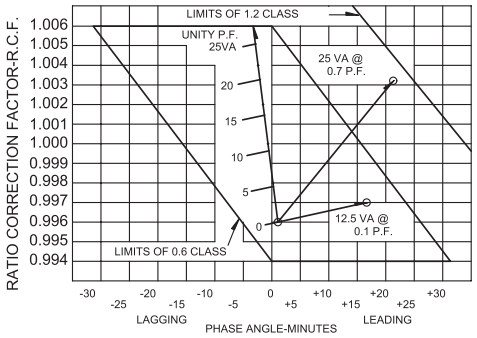

MODEL 460 DIMENSIONS

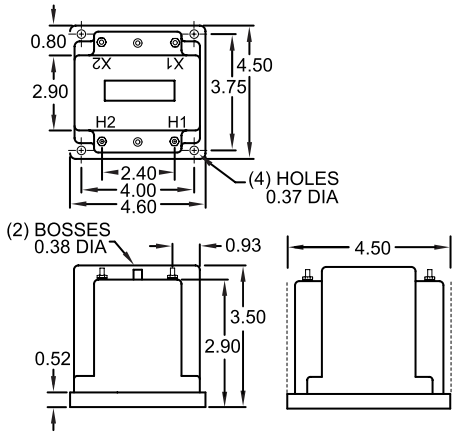

MODEL 468 DIMENSIONS

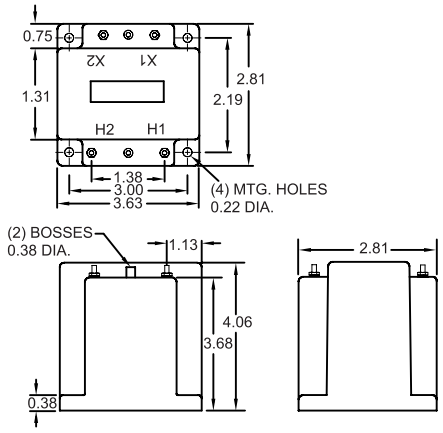

All Dimensions In Inches

FLEX-CORE®
Div. Morlan & Associates, Inc.
4970 Scioto Darby Rd. Hilliard, Ohio 43026

WWW.FLEX-CORE.COM
sales@flex-core.com

PHONE (614) 889-6152
TECH. ASSISTANCE (614) 876-8308
FAX # (614) 876-8538

POTENTIAL TRANSFORMERS

LOW VOLTAGE POTENTIAL TRANSFORMER *MODEL* 456

FEATURES

600V CLASS

- Frequency 60Hz
- Standard Secondary Voltage ..... 120 Volts
- Insulation Level ..... 0.6kV, 10kV BIL Full Wave
- Accuracy Class ..... 0.3 W, X, M, and 0.6Y. Those marked (**) are 0.6 W, X, M, and Y
- Thermal Rating ..... 500 VA at 30°C amb. 300 VA at 55°C amb.
- Approximate Weight ..... 25 Lbs.

All models on this page UL recognized ® E93779 ® LR89403



SPECIFICATIONS

- The primary and secondary terminals are No. 10-32 screws into 3/8" deep brass inserts and fitted with one lock washer and one flat washer and are contained in a sealable terminal cover.
- The core and coil assembly is encased in a thermoplastic shell and filled with resin.
- These transformers are designed for operation line-to-line. They may also be operated line-to-ground or line-to-neutral, at reduced voltage, (58% of rated volts).
- It is desirable to use a 5.0 amp BBS type fuse in the secondary to protect the transformer.

APPLICATION AND ORDERING DATA					
CATALOG NUMBER			VOLTAGE RATING	TURNS RATIO	PRIMARY FUSE RATING
NOT FUSED	1-FUSE	2-FUSES			
**456-069	456-069F	456-069FF	69.3:120	0.58:1	12A
**456-120	456-120F	456-120FF	120:120	1:1	10A
456-208	456-208F	456-208FF	208:120	1.73:1	6A
456-240	456-240F	456-240FF	240:120	2:1	6A
456-277	456-277F	456-277FF	277:120	2.31:1	6A
456-288	456-288F	456-288FF	288:120	2.4:1	5A
456-300	456-300F	456-300FF	300:120	2.5:1	4A
456-346	456-346F	456-346FF	346:120	2.88:1	4A
*456-480	*456-480F	*456-480FF	480:120	4:1	3A
*456-600	*456-600F	*456-600FF	600:120	5:1	2A

- With six exceptions these transformers are ANSI C57.13 group 1. Those marked * are group 2.
- IEC Rated models are available.
- Fuse blocks containing type KTK-R (class CC) fuses can be fitted.
- When primary fuses are requested, the ratings will be as given in the table.
- This page contains a circle diagram for the estimation of the errors for other than rated burdens.
- When only one fuse is used, it must be connected into the line side (H1) terminal wiring. This will prevent the presence of voltage at the H1 terminal for a ruptured fuse in the neutral (H2) terminal wiring for line-to-neutral connected transformers.

VOLTAGE TRANSFORMER CIRCLE DIAGRAM
THIS GRAPH IS DRAWN FOR A 60Hz 0.6 P.F. SYSTEM LOAD

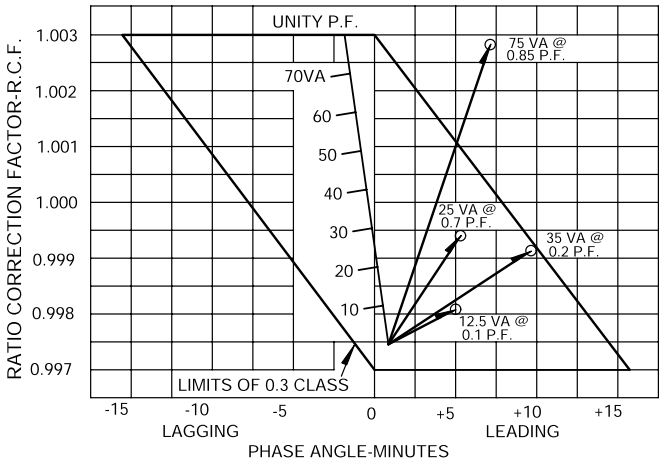

DIMENSIONS

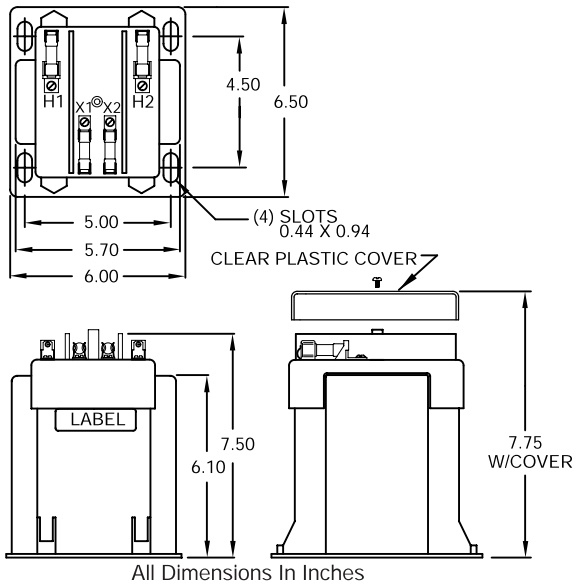

All Dimensions In Inches

FLEX-CORE®
Div. Morlan & Associates, Inc.
4970 Scioto Darby Rd. Hilliard, Ohio 43026

WWW.FLEX-CORE.COM
sales@flex-core.com

PHONE (614) 889-6152
TECH. ASSISTANCE (614) 876-8308
FAX # (614) 876-8538

POTENTIAL TRANSFORMERS

THREE PHASE THREE WIRE POTENTIAL TRANSFORMER MODEL 2VT469

FEATURES

- Frequency 60Hz
- Standard Secondary Voltage 120Vac
- Insulation Class..... 0.6kV, 10kV BIL
- UL Recognized
- **FOR INDOOR USE ONLY**
- Two Transformer Assembly in one case with all terminals accessible for an Open Delta Connection.

600V CLASS

MADE IN U.S.A.



SPECIFICATIONS

c UL us E238872 245941

Accuracy Class
± 1% at all burdens up to 5VA at 1.0 and 0.95 P.F.

Thermal Rating..... 40VA at 30°C Amb., 27VA at 55°C.

Terminals are 6-32 screws with one lock washer with cupwashers.

The core and coil assembly is encased in a thermoplastic shell and filled with resin.

These transformers are designed for operation line-to-line. They may also be operated line-to-ground or line-to-neutral at reduced voltage. (58% of rated volts)

It is desirable to use a 0.40 Amp fuse in the secondary to protect the transformer.

With two exceptions, these transformers are ANSI C57.13 Group 1. Those marked * are Group 2.

Weight .....Approximately 4.5 Lbs.

CATALOG NUMBER	VOLTAGE RATING	TURNS RATIO	REC. PRIMARY FUSE RATING
2VT469-069	69.3:120	0.58:1	1.5
2VT469-120	120:120	1:1	1.0
2VT469-208	208:120	1.73:1	0.5
2VT469-240	240:120	2:1	0.5
2VT469-277	277:120	2.31:1	0.5
2VT469-288	288:120	2.4:1	0.4
2VT469-300	300:120	2.5:1	0.4
2VT469-480	*480:120	4:1	0.25
2VT469-600	*600:120	5:1	0.25

CONNECTION DIAGRAM

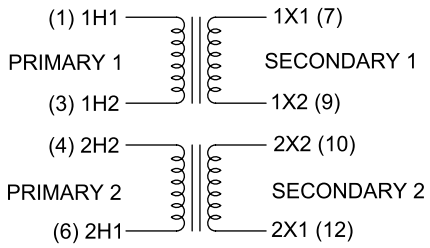

CASE DIMENSIONS

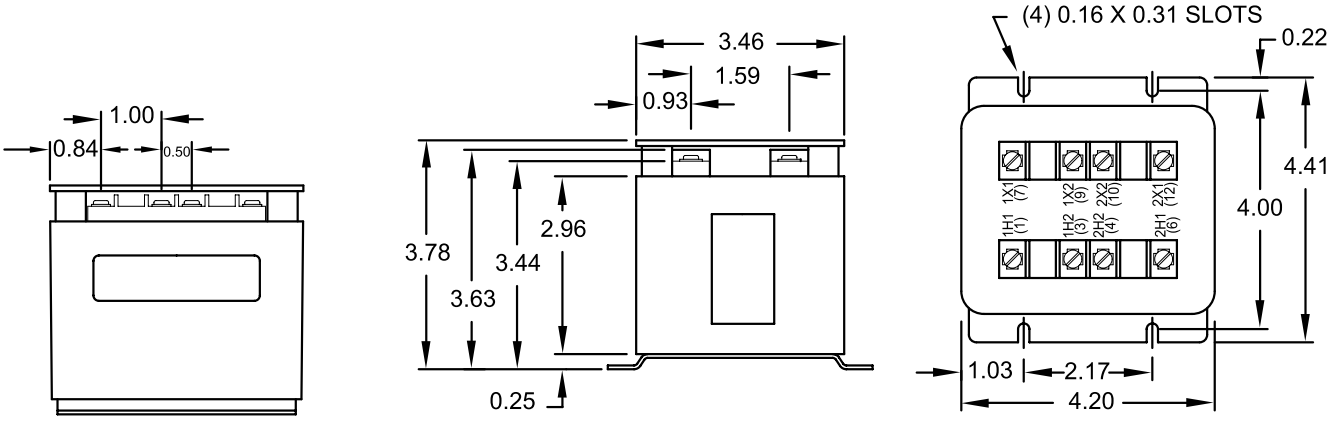

All Dimensions In Inches

FLEX-CORE®
Div. Morlan & Associates, Inc.
4970 Scioto Darby Rd. Hilliard, Ohio 43026

WWW.FLEX-CORE.COM
sales@flex-core.com

PHONE (614) 889-6152
TECH. ASSISTANCE (614) 876-8308
FAX # (614) 876-8538

POTENTIAL TRANSFORMERS

THREE PHASE OPEN DELTA TRANSFORMER *MODEL* 2VT460

600V CLASS

FEATURES

- UL Recognized
- Designed for Open Delta Connection
- The core and coil assembly is encased in a thermoplastic shell and filled with resin.
- Optional Primary Fuses are type CC rejection style.
- With two exceptions, these transformers are ANSI C57.13 group 1. Those marked ** are group 2.
- Consult Factory for IEC Rated Designs.



E93779 LR89403

SPECIFICATIONS

Frequency 60Hz
Standard Secondary Voltage ..... 120 Volts Line-to-Line
Accuracy Class (per phase) ..... 0.6 W, 1.2 X at 60Hz
Thermal Rating (per phase) ..... 150VA at 30°C Amb.
100VA at 55°C Amb.
Optional Secondary Fuses ..... BBS size, 250 V
Insulation Level ..... 0.6kV, 10kV BIL Full Wave
Terminals ..... Brass Screws No. 8-32 UNC
Weight ..... Approximately 15.5 Lbs.

CONNECTION DIAGRAM

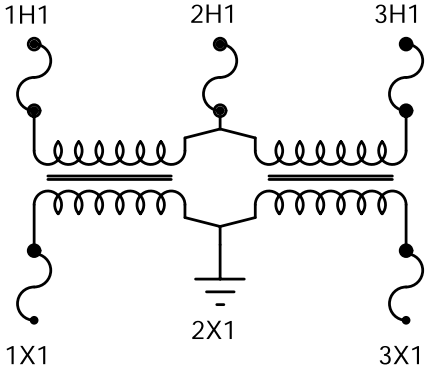

CIRCLE DIAGRAM

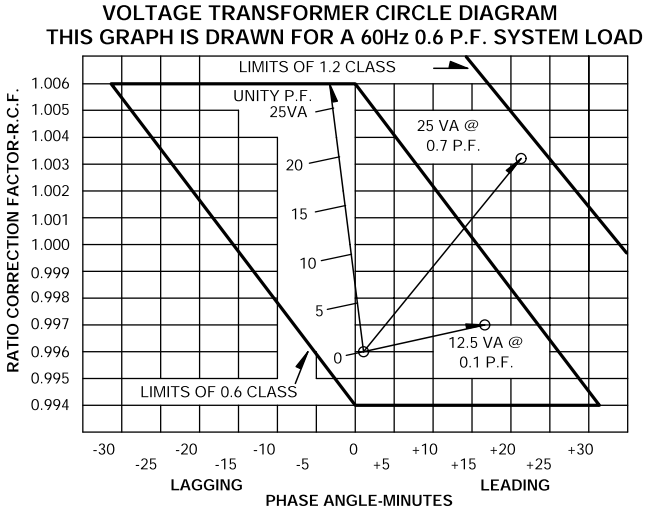

APPLICATION AND ORDERING DATA

Catalog Number	Line to Line Voltage Rating	Turns Ratio	Primary Fuse KTK-R	Secondary Fuse BBS
2VT460-069*	69.3:120	0.58:1	5.0A	1.6 AMPS
2VT460-120*	120:120	1:1	4.0A	
2VT460-208*	208:120	1.73:1	2.0A	
2VT460-240*	240:120	2:1	2.0A	
2VT460-288*	288:120	2.4:1	1.5A	
2VT460-300*	300:120	2.5:1	1.5A	
**2VT460-480*	480:120	4:1	1.0A	
**2VT460-600*	600:120	5:1	0.75A	

* Fuse Ordering
Insert F after catalog number for primary fuses.
Insert FF after catalog number for primary and secondary fuses.

DIMENSIONS

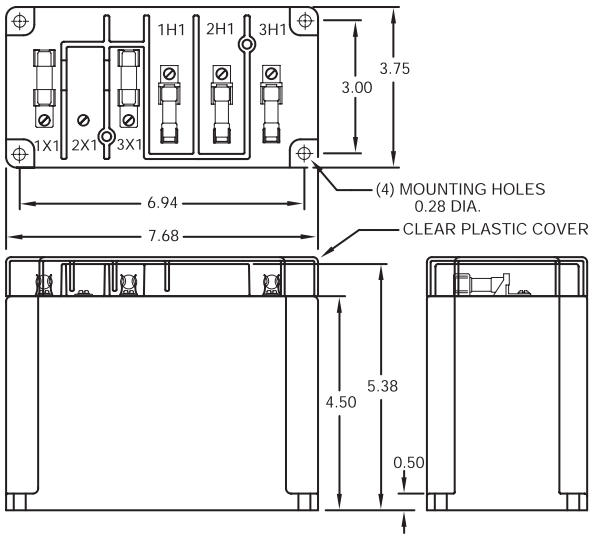

All Dimensions In Inches

FLEX-CORE®
Div. Morlan & Associates, Inc.
4970 Scioto Darby Rd. Hilliard, Ohio 43026
WWW.FLEX-CORE.COM
sales@flex-core.com
PHONE (614) 889-6152
TECH. ASSISTANCE (614) 876-8308
FAX # (614) 876-8538

POTENTIAL TRANSFORMERS

THREE PHASE POTENTIAL TRANSFORMER *MODEL* 3VTL

600V CLASS

FEATURES

- UL Recognized
- Three transformers in one case
- The core and coil assembly is encased in a thermoplastic shell and filled with resin.
- The transformer has a hard plastic terminal cover.
- Although designed for Line to Line Operation, it may also be used in Line to Neutral or Line to Ground configurations at 58% of Rated Voltage.

c UL us E238872 245941 RoHS COMPLIANT **MADE IN U.S.A.**



3VTL

SPECIFICATIONS

Frequency 60Hz
Standard Secondary Voltage ..... 120 Volts
Accuracy Class (per phase) ..... 0.6 W, 1.2 X at 60Hz
Thermal Rating (per phase) ..... 150VA at 30°C Amb.
100VA at 55°C Amb.
Operation (not fused) (3VTL) ..... Independent Phase
Insulation Level ..... 0.6kV, 10kV BIL Full Wave
Terminals ..... Brass Screws No. 8-32 UNC
Weight ..... Approximately 24 Lbs.

APPLICATION AND ORDERING DATA

CATALOG NUMBER	LINE TO LINE VOLTAGE RATING	TURNS RATIO	Recommended PRIMARY FUSE KTK-R	Recommended SECONDARY FUSE BBS (250V)
3VTL-460-120	120:120	1:1	4.0A*	1.5 AMPS
3VTL-460-208	208:120	1.73:1	2.0A*	
3VTL-460-240	240:120	2:1	2.0A*	
3VTL-460-288	288:120	2.4:1	1.5A*	
3VTL-460-480	480:120	4:1	1.0A*	
3VTL-460-600	600:120	5:1	0.75A*	

CONNECTION DIAGRAM

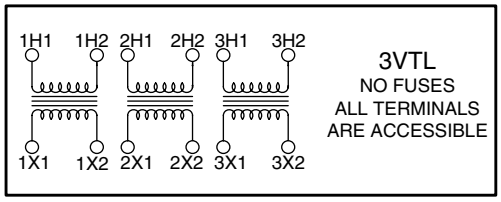

DIMENSIONS

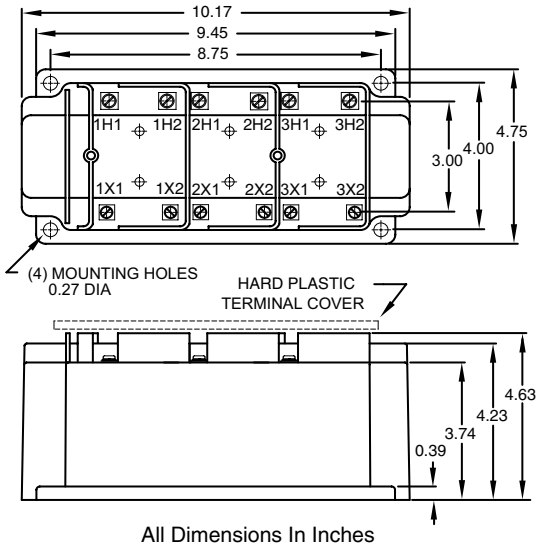

All Dimensions In Inches

FLEX-CORE®
Div. Morlan & Associates, Inc.
4970 Scioto Darby Rd. Hilliard, Ohio 43026
WWW.FLEX-CORE.COM
sales@flex-core.com
PHONE (614) 889-6152
TECH. ASSISTANCE (614) 876-8308
FAX # (614) 876-8538

POTENTIAL TRANSFORMERS

THREE PHASE POTENTIAL TRANSFORMER — MODEL 3VTN

600V CLASS

FEATURES

- UL Recognized
- Three transformers in one case
- The core and coil assembly is encased in a thermoplastic shell and filled with resin.
- The transformer has a clear plastic terminal cover.
- Designed for Line to Neutral Connections

E93779 LR89403



3VTN

SPECIFICATIONS

Frequency 60Hz
Standard Secondary Voltage ..... 120 Volts L-N
Accuracy Class (per phase) ..... 0.6 W, 1.2 X at 60Hz
Thermal Rating (per phase) ..... 150VA at 30°C Amb.
100VA at 55°C Amb.
Operation (fused) ..... Line-to-Neutral
Secondary Fuses ..... BBS
Insulation Level ..... 0.6kV, 10kV BIL Full Wave
Terminals ..... Brass Screws No. 8-32 UNC
Weight ..... Approximately 24 Lbs.

APPLICATION AND ORDERING DATA				
CATALOG NUMBER	LINE TO NEUTRAL VOLTAGE RATING	TURNS RATIO	PRIMARY FUSE KTK-R	SECONDARY FUSE BBS (250V)
3VTN-460-069F	69.3:120	0.58:1	5.0A	1.6 AMPS
3VTN-460-120F	120:120	1:1	4.0A	
3VTN-460-240F	240:120	2:1	2.0A	
3VTN-460-277F	277:120	2.31:1	2.0A	
3VTN-460-300F	300:120	2.5:1	1.5A	
3VTN-460-346F	346:120	2.88:1	1.5A	
3VTN-460-069FF	69.3:120	0.58:1	5.0A	1.6 AMPS (Included)
3VTN-460-120FF	120:120	1:1	4.0A	
3VTN-460-240FF	240:120	2:1	2.0A	
3VTN-460-277FF	277:120	2.31:1	2.0A	
3VTN-460-300FF	300:120	2.5:1	1.5A	
3VTN-460-346FF	346:120	2.88:1	1.5A	

NOTE: Only ground N & n terminals if source is 3-phase, 4 wire effectively grounded.

* Rec. Primary Fuse
F = Primary Fuse Block Provided
FF = Primary & Secondary Fuse Blocks Provided

CONNECTION DIAGRAM

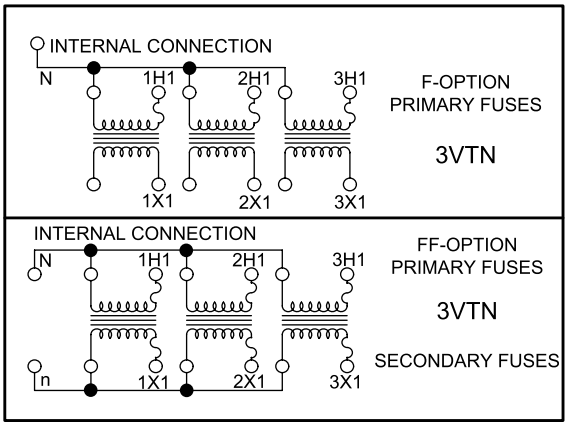

DIMENSIONS

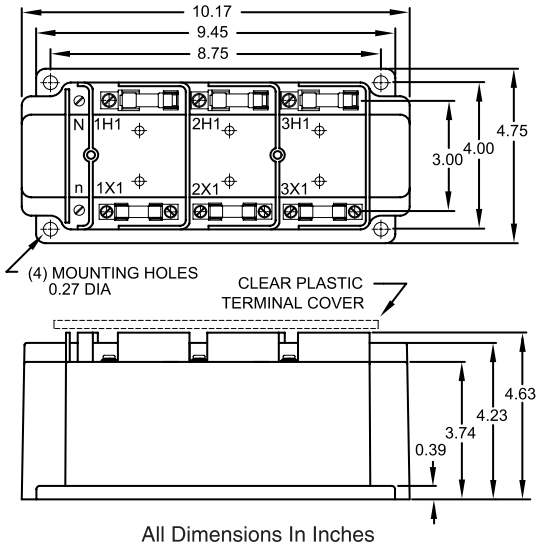

All Dimensions In Inches

FLEX-CORE®
Div. Morlan & Associates, Inc.
4970 Scioto Darby Rd. Hilliard, Ohio 43026
WWW.FLEX-CORE.COM
sales@flex-core.com
PHONE (614) 889-6152
TECH. ASSISTANCE (614) 876-8308
FAX # (614) 876-8538

MEDIUM VOLTAGE POTENTIAL TRANSFORMER *MODEL* PT3

FEATURES

- Secondary Terminals are No. 10-32 screws with one lock washer & flat washer.
- The core and coil assembly is encased in a plastic enclosure and vacuum encapsulated in polyurethane resin.
- Thermal burden rating is for 120 volt secondaries.
- 50Hz designs are available.
- Indoor type
- Fuses have 0.81" or 1.0" Dia. Caps and 4.25" or 5" clip centers
- Primary Fuses Are Included

5KV CLASS

All models on this page
UL recognized



® E145172 ® LR89403

SPECIFICATIONS

ACCURACY CLASS

0.3 WX, 0.6MY, 1.2Z at 100% rated voltage with 120V based ANSI burden. 0.6 WX 1.2 MY at 58% rated voltage with 69.3V based ANSI burden.

Frequency 60Hz
Insulation Class 5.6kV
Basic Impulse Level ..... 45kV BIL
Thermal Rating ..... 600VA at 30°C Amb.
400VA at 55°C Amb.
Approximate Weight ..... 24 Lbs.

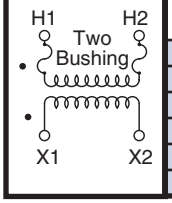

TWO BUSHING (b)			
CATALOG NUMBER	PRIMARY VOLTAGE	RATIO	SECONDARY VOLTAGE
PT3-2-45-841FF	840	7:1	120
PT3-2-45-122FF	1200	10:1	120
PT3-2-45-242FF	2400	20:1	120
PT3-2-45-332FF	3300	30:1	110-50Hz
PT3-2-45-422FF	4200	35:1	120
PT3-2-45-482FF	4800	40:1	120

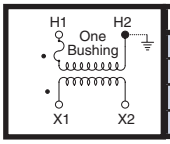

SINGLE BUSHING (a)			
PT3-1-45-841F	840	7:1	120
PT3-1-45-242F	2400	20:1	120
PT3-1-45-422F	4200	35:1	120
PT3-1-45-482F	4800	40:1	120

(a) Voltage transformers connected line-to-ground cannot be considered to be grounding transformers and must not be operated with the secondaries in closed delta because excessive currents may flow in the delta. Use single bushing with single fuse for Y type transformers.

(b) Two fuse transformers should not be used for Y connections. It is preferred practice to connect one lead from each potential transformer directly to the neutral terminal, using a fuse in the line side of the primary only. By this connection a transformer can never be "alive" from the line side by reason of a blown fuse in the neutral side. For continuous operation, the transformer primary voltage should not exceed 110% of rated value. Use two bushing with two fuses for delta type transformers.

Note: It is recommended that the system line-to line voltage not exceed the transformer insulation-class voltage.

DIMENSIONS

PT3-1-45 **PT3-2-45**

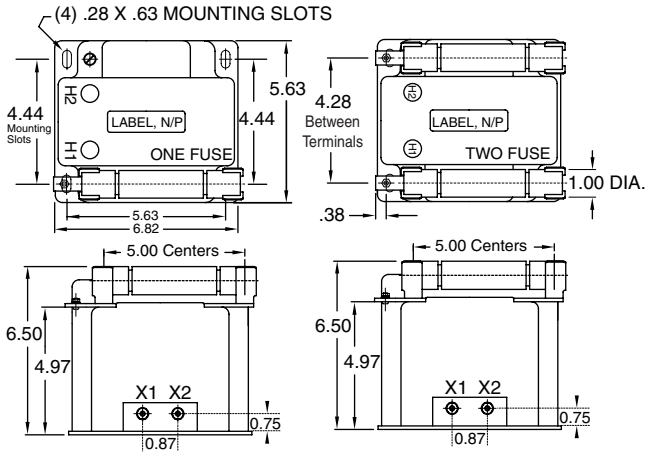

All Dimensions In Inches

RECOMMENDED SPACINGS

A = Unit To Unit = 0.75" Min.
B = HV To Ground In Air = 3.0" Min.

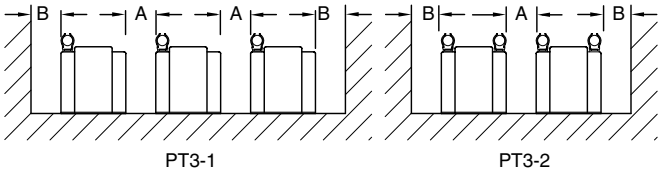

Recommended spacings are for guidance only. User needs to set appropriate values to assure performance for: high potential test, impulse test, high humidity, partial discharge, high altitude, and other considerations like configuration.

FUSE FOR MODEL PT3-45 TRANSFORMER	RATING VOLTS	INTERRUPTING AMPERES (SYM)	CONTINUOUS AMPERES	CAP DIA. INCHES	LENGTH INCHES	CLIP CENTERS INCHES	REPLACEMENT FUSE #
PT3-45-841FF & F and PT3-45-122FF	2,400	40,000	2.0EA	0.80	4.50	4.25	JCD-2E
PT3-45-242FF & F and PT3-45-332FF	5,500	50,000	2.0EA	1.00	5.63	5.00	5.5ABWNA2E
PT3-45-422FF & F and PT3-45-482FF & F	5,500	50,000	1.0EA	1.00	5.63	5.00	5.5ABWNA1E

FLEX-CORE®
Div. Morlan & Associates, Inc.
4970 Scioto Darby Rd. Hilliard, Ohio 43026
WWW.FLEX-CORE.COM
sales@flex-core.com
PHONE (614) 889-6152
TECH. ASSISTANCE (614) 876-8308
FAX # (614) 876-8538

POTENTIAL TRANSFORMERS

THREE PHASE THREE WIRE POTENTIAL TRANSFORMER *MODEL* 3PT3

FEATURES

- Frequency 60Hz
- Standard Secondary Voltage..... 120Vac
- Insulation Class..... 5.6kV, 60kV BIL Full Wave
- UL Recognized
- FOR INDOOR USE ONLY

SPECIFICATIONS

Accuracy Class.. 0.3 WX, 0.6M, 1.2Y at 100% rated voltage with 120V based ANSI burden.
Frequency..... 60Hz
Thermal Rating
350VA (2.4 secondary amps per phase) ..... 60Hz at 30°C
225VA (1.7 secondary amps per phase) ..... 60Hz at 55°C
Insulation ..... 5.6kV, 60kV BIL Full Wave
Weight ..... Approximately 38 Lbs.
Primary Terminals..... No. 10-32 Brass Screws with one flat washer and lock washer.
The core and coil assembly is encased in a plastic enclosure and vacuum encapsulated in polyurethane resin.

Recommended Spacing is for guidance only. The user needs to set appropriate values to assure performance for: high potential test, impulse test, high humidity, partial discharge, and high altitude.

Primary Fuses Included.

ALL UNITS HAVE 120Vac SECONDARIES

APPLICATION AND ORDERING DATA				
CATALOG NUMBER	RATED PRIMARY VOLTAGE	RATIO	FUSE RATING	REPLACEMENT FUSE #
3PT3-60-841FFF	840	7:1	1.0E	5.5AMWNA1.0E
3PT3-60-122FFF	1200	10:1	1.0E	5.5AMWNA1.0E
3PT3-60-242FFF	2400	20:1	1.0E	5.5AMWNA1.0E
3PT3-60-332FFF	3300	30:1	1.0E	5.5AMWNA1.0E
3PT3-60-422FFF	4200	35:1	0.5E	5.5AMWNA0.5E
3PT3-60-482FFF	4800	40:1	0.5E	5.5AMWNA0.5E

CASE DIMENSIONS

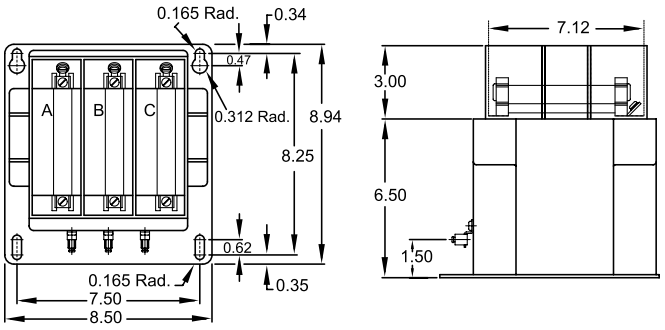

All Dimensions In Inches

5KV CLASS



E145172 LR89403

CONNECTION DIAGRAM

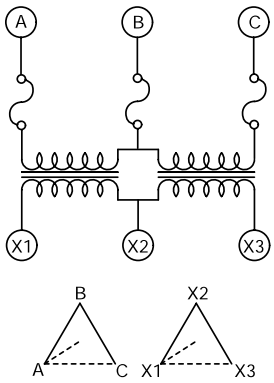

RECOMMENDED SPACING

A = CASE TO GROUND = 1.50" MIN.

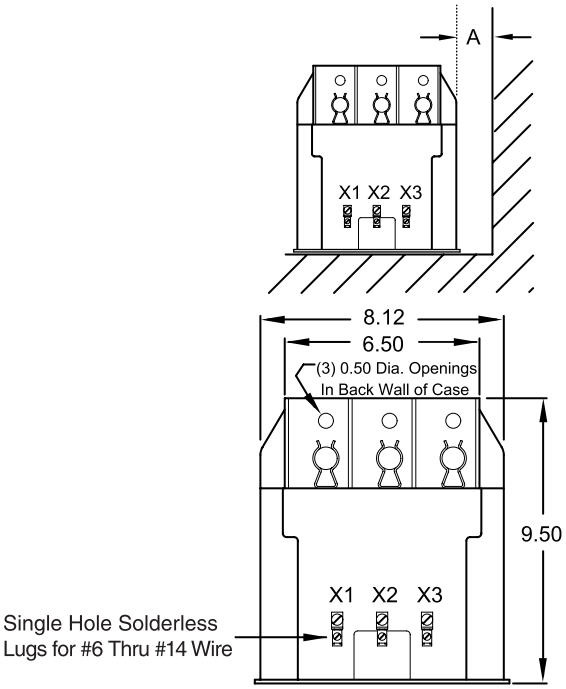

FLEX-CORE®
Div. Morlan & Associates, Inc.
4970 Scioto Darby Rd. Hilliard, Ohio 43026
WWW.FLEX-CORE.COM
sales@flex-core.com
PHONE (614) 889-6152
TECH. ASSISTANCE (614) 876-8308
FAX # (614) 876-8538

POTENTIAL TRANSFORMERS

MEDIUM VOLTAGE POTENTIAL TRANSFORMER *MODEL* PTG5

15KV CLASS

FEATURES

- Standard Secondary Voltage 120Vac
- UL Recognized, CSA
- **FOR INDOOR USE ONLY**
- Primary voltages marked with an (*) are approved Revenue Metering in Canada by Industry Canada Approval No. AE-0431 Rev 1.



E145172 LR89403

SPECIFICATIONS

Accuracy Class
0.3 WXMYZ, 1.2ZZ at 100% rated voltage with 120V based ANSI burden.
0.3 WXMY, 1.2Z at 58% rated voltage with 69.3 V based ANSI burden.
Frequency..... 60Hz
Insulation Class .....15.5kV, 110kV BIL Full Wave
Thermal Rating.....1500VA at 30°C Amb.
1000VA at 55°C Amb.
Weight ..... Approximately 91 Lbs.

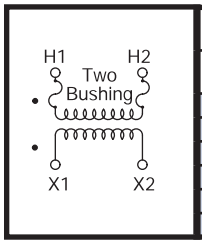

CATALOG NUMBER	TWO BUSHING (b)		
FUSES	PRIMARY VOLTAGE	RATIO	SECONDARY VOLTAGE
PTG5-2-110-722FF	*7200	60:1	120
PTG5-2-110-842FF	*8400	70:1	120
PTG5-2-110-113FF	11000	100:1	110-50Hz
PTG5-2-110-123FF	*12000	100:1	120
PTG5-2-110-1322FF	13200	110:1	120
PTG5-2-110-1442FF	*14400	120:1	120

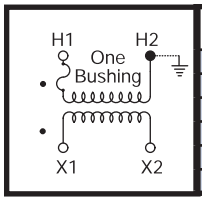

FUSES	ONE BUSHING (a)			R_{FR} (c)
PTG5-1-110-722F	*7200	60:1	120	65
PTG5-1-110-842F	*8400	70:1	120	65
PTG5-1-110-113F	11000	100:1	110-50Hz	65
PTG5-1-110-123F	*12000	100:1	120	65
PTG5-1-110-1322F	13200	110:1	120	65
PTG5-1-110-1442F	*14400	120:1	120	65

(a) Voltage transformers connected line-to-ground cannot be considered to be grounding transformers and must not be operated with the secondaries in closed delta because excessive currents may flow in the delta.

(b) Two fuse transformers should not be used for Y connections. It is preferred practice to connect one lead from each voltage transformer directly to the neutral terminal, using a fuse in the line side of the primary only. By this connection a transformer can never be "alive" from the line side by reason of a blown fuse in the neutral side. For continuous operation, the transformer primary voltage should not exceed 110% of rated value. Use one fuse, one bushing models for Y applications. Use two fuse, two bushing models for delta applications.

(c) For ferroresonance considerations. Values in table are in Ohms.

Note: It is recommended that the system line-to-line voltage not exceed the transformer insulation level.

- Primary terminals that are fused are 1/4 - 20 brass screws with one flat washer, lock washer and two nuts.
- Secondary terminals are No. 10-32 brass screws with one flat washer and lock washer.
- The core and coil assembly is encased in a plastic enclosure and vacuum encapsulated in polyurethane resin.
- Thermal burden rating is for 120 volt secondaries.
- Plated steel mounting base.
- Fuses have 1.63" Dia. Caps and 11.50" clip centers.
- A test card is provided with each unit.

FLEX-CORE®
Div. Morlan & Associates, Inc.
4970 Scioto Darby Rd. Hilliard, Ohio 43026
WWW.FLEX-CORE.COM
sales@flex-core.com
PHONE (614) 889-6152
TECH. ASSISTANCE (614) 876-8308
FAX # (614) 876-8538

POTENTIAL TRANSFORMERS

DIMENSIONS, ETC. — *MODEL* PTG5

PTG5-1-110 DIMENSIONS

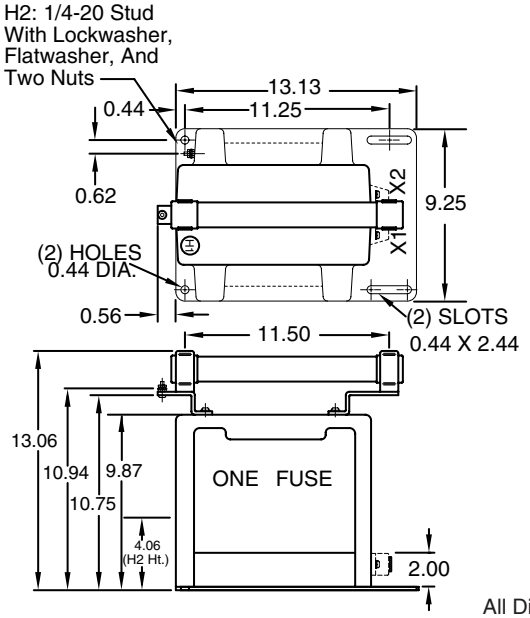

PTG5-2-110 DIMENSIONS

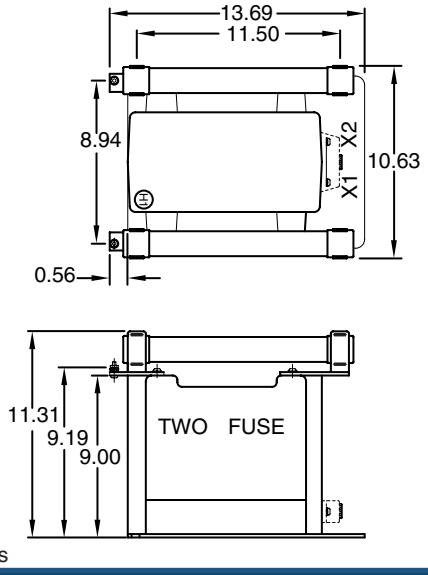

All Dimensions In Inches

RECOMMENDED SPACINGS

A = Unit To Unit Or To Ground = 1.25" Min.
B = HV To Ground In Air = 6.5" Min.

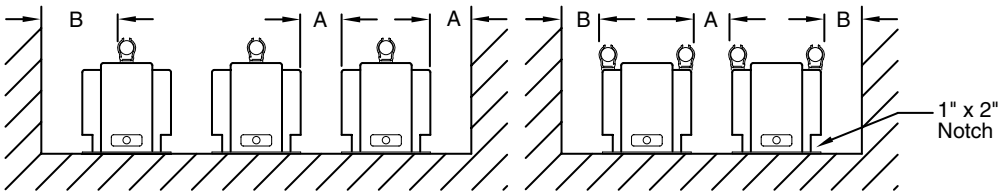

Recommended spacings are for guidance only. User needs to set appropriate values to assure performance for: high potential test, impulse test, high humidity, partial discharge, high altitude, and other considerations like configuration.

FUSE FOR MODEL PTG5 TRANSFORMER	RATING VOLTS	INTERRUPTING AMPERES (SYM)	SUGGESTED RATING CONTINUOUS AMPERES	CAP DIA. INCHES	LENGTH INCHES	CLIP CENTERS INCHES	REPLACEMENT FUSE #
7200:120V	15.5kV	80,000	1.0E	1.63	13	11.50	15.5KV12CAVH1E
8400:120V	15.5kV	80,000	1.0E	1.63	13	11.50	15.5KV12CAVH1E
11000:110V	15.5kV	80,000	0.5E	1.63	13	11.50	15.5KV12CAVH0.5E
12000:120V	15.5kV	80,000	0.5E	1.63	13	11.50	15.5KV12CAVH0.5E
13200:120V	15.5kV	80,000	0.5E	1.63	13	11.50	15.5KV12CAVH0.5E
14400:120V	15.5kV	80,000	0.5E	1.63	13	11.50	15.5KV12CAVH0.5E

The circle diagram can be used to predict the performance of a transformer for various loads and power factors. A convenient scale of volt-amperes is shown on the unity power factor line (u.p.f.) and commences at the zero or no-load locus. To use the diagram, measure the known V.A. and scribe an arc about the "zero" locus of a length that contains the angle of the burden power factor. The point at which the arc terminates is the error locus in phase angle minutes and ratio correction factor.

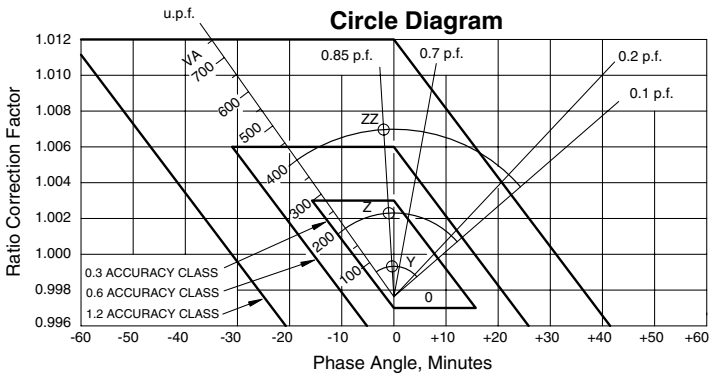

FLEX-CORE®
Div. Morlan & Associates, Inc.
4970 Scioto Darby Rd. Hilliard, Ohio 43026
WWW.FLEX-CORE.COM
sales@flex-core.com
PHONE (614) 889-6152
TECH. ASSISTANCE (614) 876-8308
FAX # (614) 876-8538

POTENTIAL TRANSFORMERS

OUTDOOR POTENTIAL TRANSFORMERS — MODEL JVW-3

APPLICATIONS

Designed for outdoor service. Suitable for operating meters, instruments, relays, and control devices.

5KV CLASS



SPECIFICATIONS

Frequency..... 50/60Hz
Thermal Rating.....750VA @ 30°C Amb.
Insulation Level.....5kV, 60kV BIL
Weight .....Approximately 44 Lbs.

Manufactured to meet the requirements of ANSI/IEEE C57.13

APPLICATION AND ORDERING DATA								
CATALOG NUMBER	LINE-TO-LINE CIRCUIT VOLTAGE FOR PERMISSIBLE PRIMARY CONNECTIONS			TRANSFORMER RATING (a)		ANSI ACCURACY CLASSIFICATION, 60Hz		
						BURDEN PER ANSI		BURDEN IMPEDANCE AT RATED VOLTAGE BUT OPERATED AT 58% RATED VOLTAGE (c)
	Δ	Y	Y ONLY	PRIMARY VOLTAGE	RATIO	OPERATED AT RATED VOLTAGE	OPERATED AT 58% OF RATED VOLTAGE (b)	
763X030001	2400	2400	4160	2400	20:1	0.3 W, X, M, Y; 1.2 Z	0.3 W, X; 1.2 M, Y	0.3 W′, X′, M′, Y′
763X030002	4200	4200	---	4200	35:1	0.3 W, X, M, Y; 1.2 Z	0.3 W, X; 1.2 M, Y	0.3 W′, X′, M′, Y′
763X030003	4800	4800	---	4800	40:1	0.3 W, X, M, Y; 1.2 Z	0.3 W, X; 1.2 M, Y	0.3 W′, X′, M′, Y′

Notes:
(a) For continuous operation, the transformer-rated primary voltage should not be exceeded by more than 10%. Under emergency conditions, over-voltage must be limited to 1.25 times the transformer primary-voltage rating.
(b) Applies to transformers connected Y-Y on a circuit in which the line-to-line voltage is the same as the transformer-rated primary voltage. In each case, the transformer is operated with reduced voltage and reduced excitation (58% of normal). In determining the accuracy classification under such conditions, the Volt-Ampere rating of the burden is maintained constant, regardless of the transformer secondary voltage.
(c) The prime symbol (′) is used to signify that these burdens do not correspond to standard ANSI definitions.

DIMENSIONS

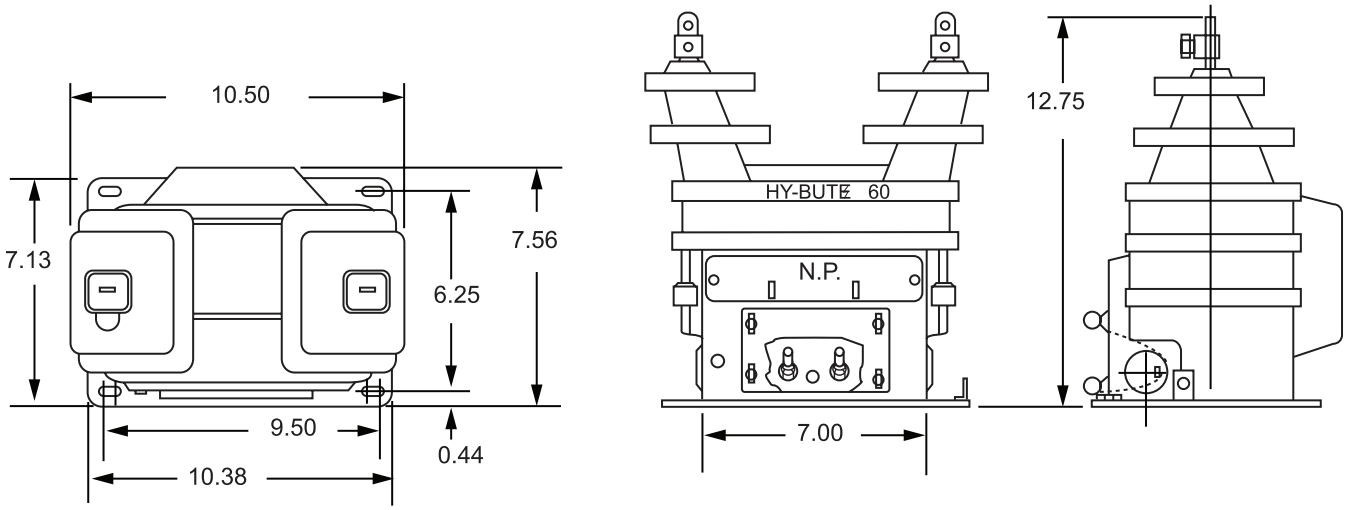

All Dimensions In Inches

FLEX-CORE®
Div. Morlan & Associates, Inc.
4970 Scioto Darby Rd. Hilliard, Ohio 43026
WWW.FLEX-CORE.COM
sales@flex-core.com
PHONE (614) 889-6152
TECH. ASSISTANCE (614) 876-8308
FAX # (614) 876-8538

POTENTIAL TRANSFORMERS

OUTDOOR POTENTIAL TRANSFORMER *MODEL* JVW-5C

SPECIFICATIONS

15KV CLASS

Designed for outdoor service.
Suitable for operating meters, instruments, relays and control devices.

THERMAL RATING (VOLT-AMPERES)
1500VA @ 30°C Ambient

DIMENSIONS/WEIGHT
Height ..... 16.34"
Depth ..... 13.69"
Width ..... 11.50"
Weight ..... Approximately 80 Lbs.

INSULATION LEVEL ..... 15.5kV, 110kV BIL

FREQUENCY 60Hz

Manufactured to meet the requirements of ANSI/IEEE C57.13



JVW-5C are manufactured using Hydrophobic Cycloaliphatic Epoxy (HCEP). Insulation levels meet or exceed those specified in IEEE C57.13 and CSA CAN3-C13. Dimensions meet IEEE C12.11. Superior designs, HCEP epoxy, and APG processes, are combined to produce the highest quality and reliability available in the industry for outdoor applications.

APPLICATION AND ORDERING DATA

CATALOG NUMBER	RATED PRIMARY VOLTAGE	RATIO	IEEE METERING ACCURACY	RATED VOLTAGE FACTOR	THERMAL RATING (VA @ 30°C AMB.)
Single Bushing Style					
765C130101	7200/12470GY	60:1	0.3 W, X, M, Y, Z, 1.2 ZZ	1.1	1500
765C130102	7620/13200GY	63.5:1	0.3 W, X, M, Y, Z, 1.2 ZZ	1.1	1500
765C130103	8400/14560GY	70:1	0.3 W, X, M, Y, Z, 1.2 ZZ	1.1	1500
Double Bushing Style					
765C130201	7200/12470Y	60:1	0.3 W, X, M, Y, Z, 1.2 ZZ	1.1	1500
765C130202	7620/13200Y	63.5:1	0.3 W, X, M, Y, Z, 1.2 ZZ	1.1	1500
765C130203	8400/14560Y	70:1	0.3 W, X, M, Y, Z, 1.2 ZZ	1.1	1500
765C130204	12000/12000Y	100:1	0.3 W, X, M, Y, Z, 1.2 ZZ	1.1	1500
765C130205	13200/13200Y	110:1	0.3 W, X, M, Y, Z, 1.2 ZZ	1.1	1500
765C130206	14400/14400Y	120:1	0.3 W, X, M, Y, Z, 1.2 ZZ	1.1	1500

DIMENSIONS

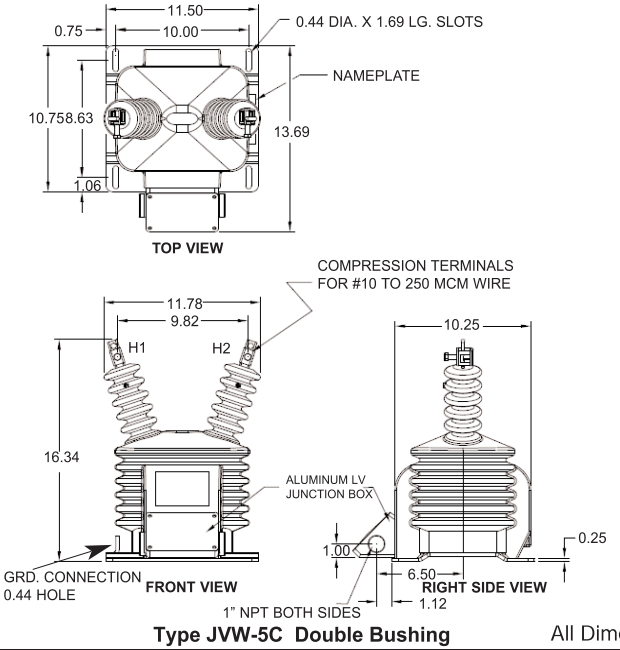

Type JVW-5C Double Bushing

All Dimensions In Inches

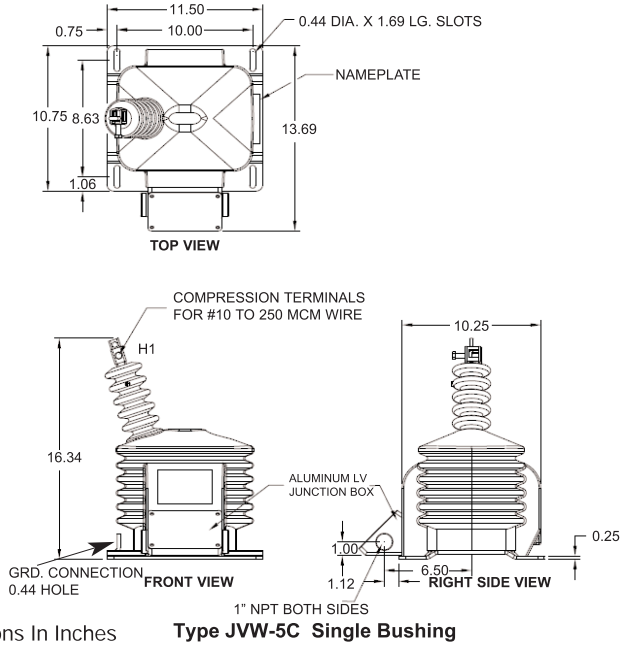

Type JVW-5C Single Bushing

FLEX-CORE®
Div. Morlan & Associates, Inc.
4970 Scioto Darby Rd. Hilliard, Ohio 43026

WWW.FLEX-CORE.COM
sales@flex-core.com

PHONE (614) 889-6152
TECH. ASSISTANCE (614) 876-8308
FAX # (614) 876-8538

VOLTAGE AND CURRENT SWITCH ASSEMBLY *MODEL* U3889

VOLTAGE DISCONNECT AND CURRENT TRANSFORMER SHUNT FOR 3 PHASE VOLTAGES & 3 CURRENT TRANSFORMERS

- UL recognized

This switch assembly is designed to provide a disconnecting means for your watt transducer or meter. Not only can this switch assembly provide isolation from line voltages, it also will short out current transformer secondaries to prevent transformer damage which may occur when the circuit is opened under load.

SWITCH DIMENSIONS 9 1/2" X 3 1/2" X 2 3/4"
COVER DIMENSIONS 9 13/16" X 4 1/2" X 3"

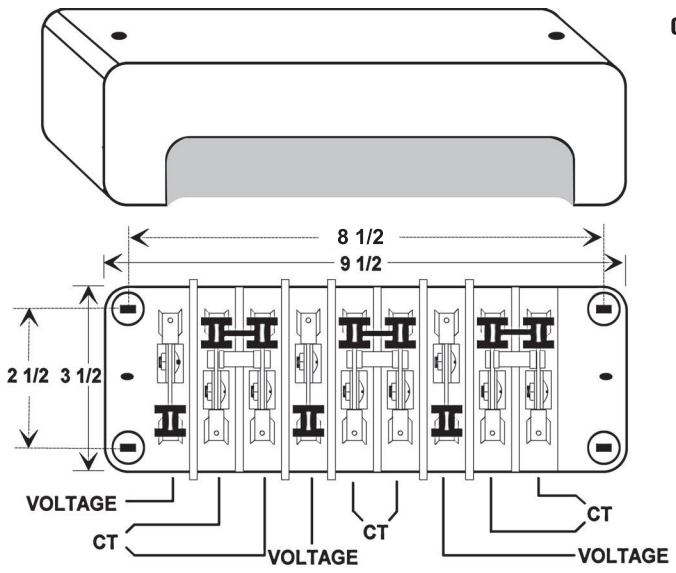

All Dimensions In Inches

c UL us
E109317



MODEL U3889/209PF
- 3 Phase Switch Assembly
- 30 Amp Rated
- 600Vac
- Back Panel Mounted
- Weight.....2.5 Lbs.

The bottom side of the switch is connected to the circuits being measured. The top side of the switch is connected to the watt transducer or meter. The switch handles are color coded red for voltage and black for current. The plastic cover is constructed so that all switches must be in the closed position before the cover can be sealed.

FUSE BLOCK/FUSES *MODEL* KLK

FEATURES
- 600V - 30 Amp Base
- FUSES INCLUDED
- 1, 2, or 3 Pole
- Fuse Block supplied with fuse cover

SPECIFICATIONS
- Base, high impact thermoplastic (125°C)
- Flammability Rating 94V-0
- Clip, Copper Alloy, Tin Plated
- Midget Fuses - 3 Amp
- UL Recognized - CSA Certified
- Base Dimensions .... 2.35" X 3.13" X 1.29" .....3 Pole
  1.60" X 3.13" X 1.29" .....2 Pole
  0.85" X 3.13" X 1.29" .....1 Pole
- Max Wire Size ..... 10 AWG
- Weight ..... 6.0 oz.


KLK3


KLK2


KLK1


Fuse Cover With Fuse Puller

® E14721 ® LR7316

ORDERING INFORMATION	
KLK-1	1 POLE
KLK-2	2 POLE
KLK-3	3 POLE

FLEX-CORE®
Div. Morlan & Associates, Inc.
4970 Scioto Darby Rd. Hilliard, Ohio 43026
WWW.FLEX-CORE.COM
sales@flex-core.com
PHONE (614) 889-6152
TECH. ASSISTANCE (614) 876-8308
FAX # (614) 876-8538

FUSE BLOCKS

FUSE BLOCKS — *MODEL* BMM603

FEATURES

- Available in 1-, 2-, and 3-pole configurations to meet stocking requirements.
- DIN-Rail and panel mount versatility allows one product to be used for multiple applications, lowering inventory cost.
- Compact footprint consumes minimal panel space.
- Optional see-through cover enhances safety with IP20 finger-safe protection, lockout/tagout capability and open circuit indication.
- Tin-plated bimetallic copper fuse clips deliver superior fatigue resistance compared to traditional spring brass.
- Terminal connections meet application needs including 1/4" spade quick connect terminals for faster panel assembly.
- Reduce labor and enhance safety of any panel design.

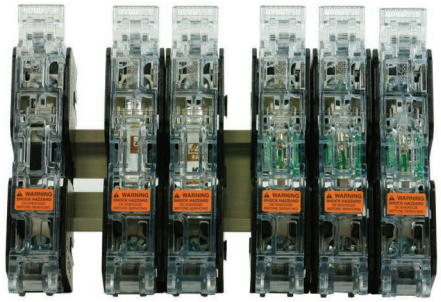

SPECIFICATIONS

Volts 600V
Amps ..... Up to 30A
Withstand ..... 200kA Rms Sym.

- Covers are included in the overall UL Listing/Recognition and CSA Certification.
- IP20 finger-safe. (With installed cover only)
- 1-, 2-, 3-pole units assembled.
- Blocks ..... UL 94V0, self-extinguishing.
- Covers ..... UL 94HB, self-extinguishing.
- Blocks ..... -40°C to +120°C.
- Non indicating covers ..... -40°C to +120°C.
- Indicating covers ..... -20°C to +90°C*.
- 3 Amp fuses supplied.

Materials

Base ..... Thermoplastic
Terminals ..... Tin-plated bimetallic copper (Tighten up to 20 Inch Lbs.)
Covers ..... Thermoplastic
Screws and pressure plates ..... Zinc-plated steel
Optional fuse puller ..... P/N FUSE PULLER FP2

E14853-IZLT2 47235-6225-01

APPLICATION AND ORDERING DATA			
MODEL #	POLES	OPTIONAL NON-INDICATING COVER	OPTIONAL INDICATING COVER
BMM603-1SQ	1	CVR-CCM-QC-1	*CVRI-CCM-QC-1
BMM603-2SQ	2	CVR-CCM-QC-2	*CVRI-CCM-QC-2
BMM603-3SQ	3	CVR-CCM-QC-3	*CVRI-CCM-QC-3

*Indication requires minimum 90Vac/dc and closed circuit to illuminate.

DIMENSIONS

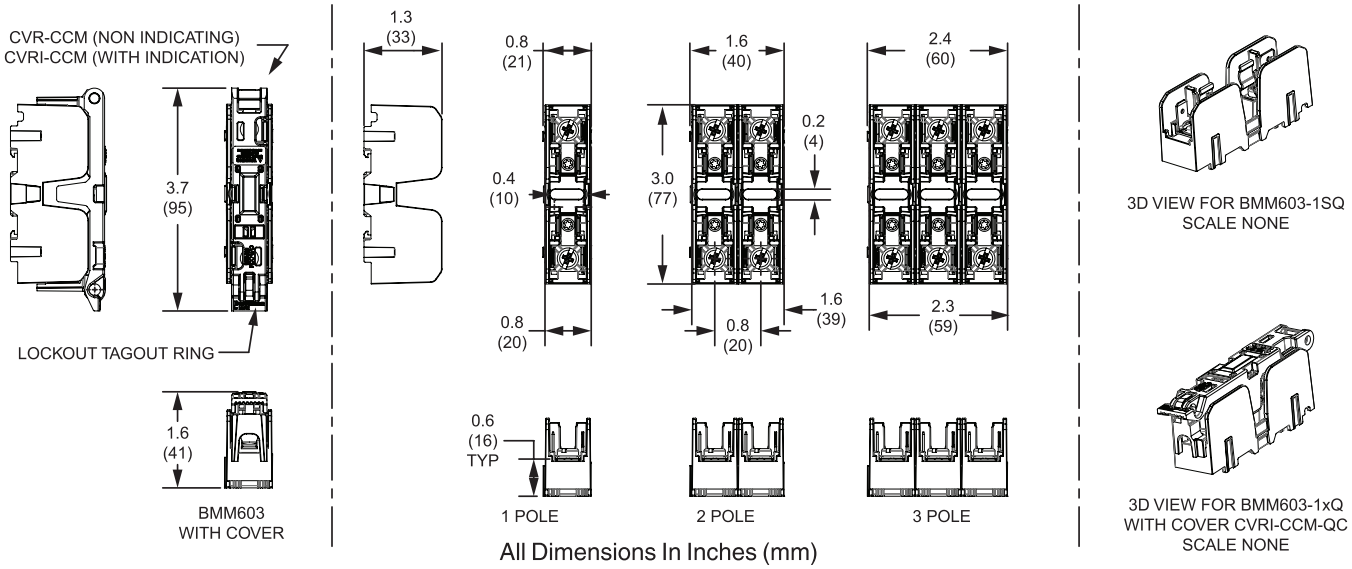

All Dimensions In Inches (mm)

3D VIEW FOR BMM603-1SQ
SCALE NONE

3D VIEW FOR BMM603-1xQ
WITH COVER CVRI-CCM-QC
SCALE NONE

FLEX-CORE®
Div. Morlan & Associates, Inc.
4970 Scioto Darby Rd. Hilliard, Ohio 43026
WWW.FLEX-CORE.COM
sales@flex-core.com
PHONE (614) 889-6152
TECH. ASSISTANCE (614) 876-8308
FAX # (614) 876-8538

SHORTING TERMINAL BLOCK — MODEL 17SC

FEATURES

- UL Recognized
- Short circuiting versions for meter servicing, CT tap changing, etc.
- Rugged non-chipping heavy duty construction
- Clear plastic cover
- 4, 6, and 8 Pole configuration

600V CLASS



1708SC



1706SC



1704SC

LR19766 E62806

SPECIFICATIONS

Rating 600Vac, 75A
Wire Range..... 18-10 AWG
Material..... Thermoplastic body
Terminal Screws ..... #10-32 nickel plated brass
Terminals .....Brass, allows lugs up to 1/2" in width
4, 6 and 8 pole configurations .....Shorting type with covers, shorting screws and screw "Parking Stations"
Surface Mounting .....Flat base for one piece terminal block replacement
*Optional DIN Rail Adapters for mounting on rail EN50035(DIN 1)..... P/N DIN-R-1-KIT

ORDERING INFORMATION	
CATALOG NUMBER	NUMBER OF POLES
1704SC	4
1706SC	6
1708SC	8

MOUNTING, WIRING & DIMENSIONS

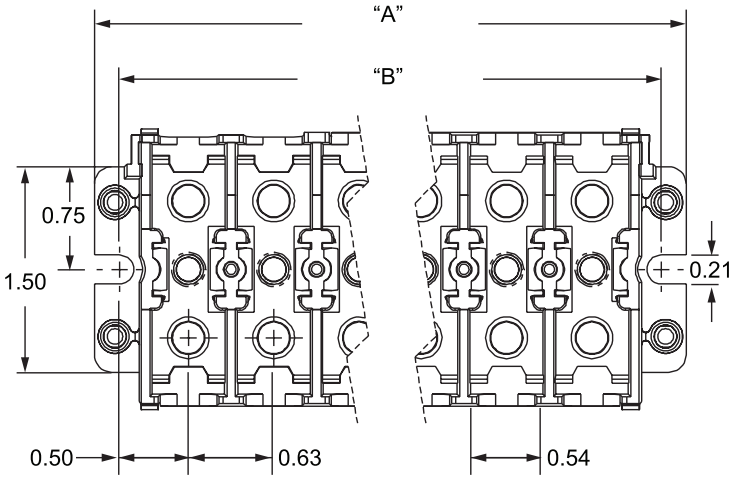

CLEARANCE FOR NO. 10 SCREW TORQUE 25-30 IN. LBS.

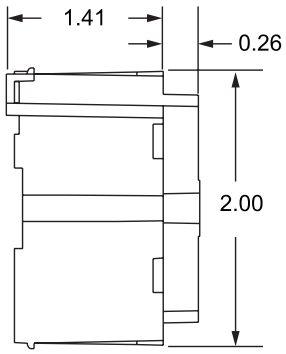

All Dimensions In Inches

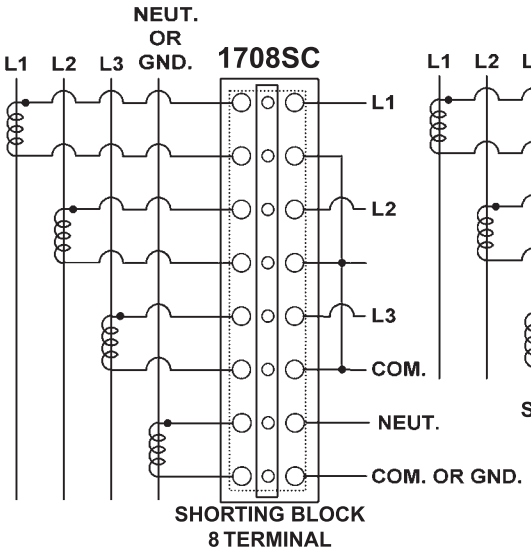

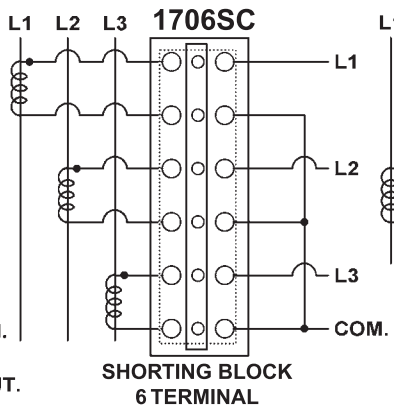

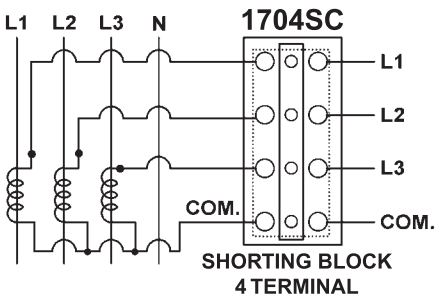

CAT #	CKTS.	MOUNTING A	MOUNTING B	WEIGHT
1704SC	4	3.25	2.89	4.5 oz.
1706SC	6	4.50	4.14	6.5 oz.
1708SC	8	5.75	5.39	8.5 oz.

FLEX-CORE®
Div. Morlan & Associates, Inc.
4970 Scioto Darby Rd. Hilliard, Ohio 43026
WWW.FLEX-CORE.COM
sales@flex-core.com
PHONE (614) 889-6152
TECH. ASSISTANCE (614) 876-8308
FAX # (614) 876-8538

DIGITAL COUNTERS

DIGITAL COUNTER — *MODEL* E5-024-C0400

FEATURES

- 8 Digit 0.31" High LCD Display
- Battery Life: Eight Years
- Custom CMOS Technology

⚠WARNING!
This product contains a lithium battery and must not be cut open, disposed of in a fire or exposed to temperatures outside the range of -4°F to +158°F (-20°C to +70°C)

RoHS COMPLIANT

CE

c UL us E177646



FEATURES

ELECTRICAL

Power..... Internal Lithium Battery, 8 Yr. life (non-replaceable)
Count Input.....Contact Closure or Open Collector
Low Speed.....30Hz max.

Min. Pulse..... 12µs
Current Consumption .....15 micro Amps max. at 3V
Reset Pushbutton.....Enable Terminals 4 & 6
Reset - Remote ..... Contact Closure to Terminals 3 & 6

Min. Pulse..... 15µs
Memory .....Yes

PHYSICAL

Case Material .....ABS Cycolac
Front Panel Rated..... (IP65) Nema 4
Mounting.....Plastic Clip
Operating Temp..... -10°C to +55°C
Ambient Humidity ..... <85% RH non-condensing
Weight .....3.0 oz.

DIMENSIONS

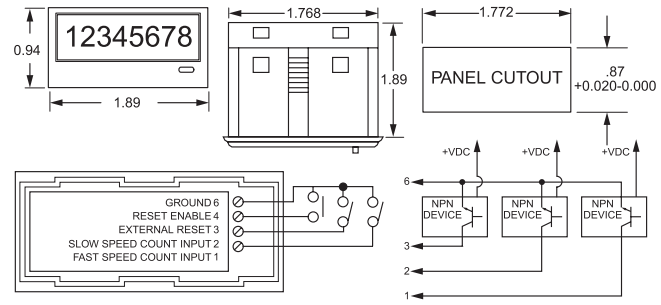

Contact closure inputs — Open collector (NPN) inputs

All Dimensions In Inches

ELAPSED TIME METER — *MODEL* 240

FEATURES

- 3 1/2", 6 Digit Counter
- 5/32" High Digits showing hours and tenths of hours, or minutes and tenths of minutes

3 1/2" SQUARE

c UL us E91703

SA



SPECIFICATIONS

Accuracy.....Matches Frequency Control of Power System
Vibration Shock ..... Meets ANSI Specification C39.1
Materials
Case ..... Clear Polycarbonate
Frame ..... Black Polycarbonate
Front Cover.....Polycarbonate
Terminals .....Brass Terminal Studs
Input Range.....120 or 208/240 or 480Vac, 60Hz
Sealing..... Non Reset Types are Weather Resistant. Sealed window and no through screw holes for flange or back-of-panel mounting protect motor, counter, and gearing from rain or panel wash-down.
Insulation Level.....Operating at 120, 208, 240 or 480Vac, will pass Hi-pot of 2000Vrms for one minute.
Burden..... 3VA Typical
Motor .....Synchronous
Weight ..... 10 oz.

NON RESET TYPE		
VOLT AC	REGISTER IN MINUTES	REGISTER IN HOURS
120	240-313-AAAB	240-311-AAAB
240	240-313-ABAB	240-311-ABAB
480	240-313-ACAB	240-311-ACAB
RESET TYPE		
VOLT AC	REGISTER IN MINUTES	REGISTER IN HOURS
120	240-314-AAAB	240-312-AAAB
240	240-314-ABAB	240-312-ABAB
480	240-314-ACAB	240-312-ACAB

DIMENSIONS

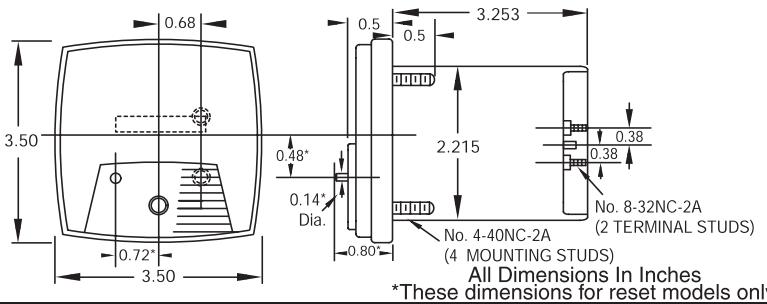

All Dimensions In Inches
*These dimensions for reset models only.

MOUNTING/PANEL DRILLING

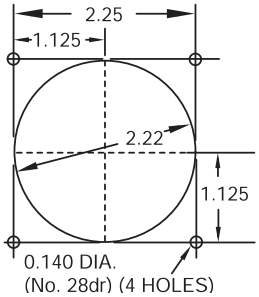

FLEX-CORE®
Div. Morlan & Associates, Inc.
4970 Scioto Darby Rd. Hilliard, Ohio 43026

WWW.FLEX-CORE.COM
sales@flex-core.com

PHONE (614) 889-6152
TECH. ASSISTANCE (614) 876-8308
FAX # (614) 876-8538

OPEN CIRCUIT PROTECTORS

OPEN CIRCUIT PROTECTOR — *MODEL* OCP

APPLICATIONS

Open circuit protection for relay classes through C400 and all classes through C400 and Metering classes.

Frequency..... 50-400Hz
Ambient Temperature Range.....-30°C to +55°C
Normal Secondary Current.....5Aac
Short Time Overcurrent...100A for 1 Sec (80A for 2 Sec.)
Max. Continuous Current.....10A through one element or 7.5A through all three independent elements.
Terminals ...Copper with brass slotted pan head screws. No 8-32 x 1/4, with cupped washers.
Weight ..... 1.2 Lbs.



1 ELEMENT OPEN CIRCUIT PROTECTOR			
CATALOG #	RECOMMENDED CT RELAY CLASS	CLAMPING PEAK VOLTAGE LIMIT (V PEAK NOM)	STANDARD RELAY BURDEN (Ω)
1-OCP-100	Thru C100	200	1
1-OCP-200	C200	400	2
1-OCP-400	C400	800	3

3 ELEMENT OPEN CIRCUIT PROTECTOR			
CATALOG #	RECOMMENDED CT RELAY CLASS	CLAMPING PEAK VOLTAGE LIMIT (V PEAK NOM)	STANDARD RELAY BURDEN (Ω)
3-OCP-100	Thru C100	200	1
3-OCP-200	C200	400	2
3-OCP-400	C400	800	3

DIMENSIONS

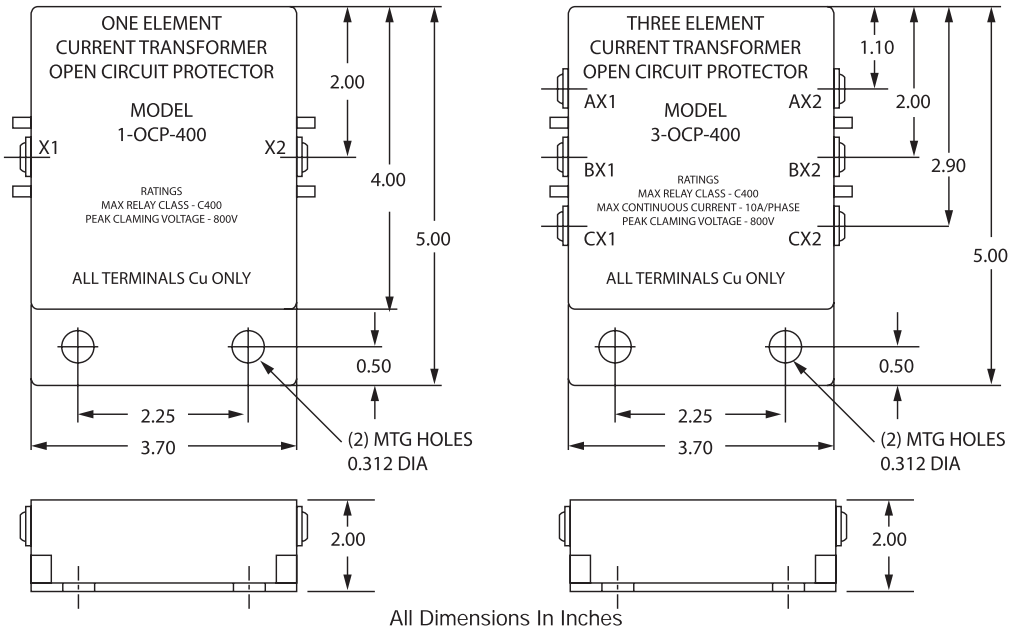

All Dimensions In Inches

FLEX-CORE®
Div. Morlan & Associates, Inc.
4970 Scioto Darby Rd. Hilliard, Ohio 43026

WWW.FLEX-CORE.COM
sales@flex-core.com

PHONE (614) 889-6152
TECH. ASSISTANCE (614) 876-8308
FAX # (614) 876-8538

OPEN CIRCUIT PROTECTORS

OPEN CIRCUIT PROTECTOR *MODEL* OCP

SPECIFICATIONS

A current transformer secondary should never be open circuited while the current transformer primary circuit is energized. If this situation should occur there is a possibility of developing extemely high voltages which could be dangerous to personnel or cause an insulation breakdown.

The OCP series of open circuit protectors are voltage sensing devices using high speed shorting SCR switches. When the secondary peak voltages exceeds the clamping voltage value, the SCR operates, shorting the C.T. secondary and reducing the voltage to about 2 volts in less than 1/4 cycle. This process repeats each current polarity reversal. The protection is activated each half cycle.

The single element open circuit protector is provided with two terminals and the three element open circuit protector is provided with six terminals for connection across the secondary of the C.T.s and parallels with burden. It can also be connected across the current terminals of a protective relay, meter, or other current operated device without affecting the operation of the device. Secondary polarity of the C.T.s is not critical to the OCP.

The OCP also provides protection against high secondary voltage transients, which may damage the burden or secondary winding. If the transient voltage exceeds the voltage clamping limit, the Open Circuit Protector will trigger. After triggering, the voltage will fall to about 2 volts and remain there until the next zero crossing of the current waveform, at which time the device resets and the cycle repeats as necessary. In the transient mode of protection, triggering will occur only on the half cycle where the transient appears. The leakage current of the OCP is insignificant and will not cause a ratio or phase angle error in the current transformer accuracy.

Metering class C.T.s with a rating factor of 2 could operate up to 10 amps on a continuous basis. Relaying class C.T.s are designed to withstand short time overloads up to 20 times normal (100 amps RMS) for 2 seconds. The OCP is designed to tolerate both this condition and overload conditions of 80 amps RMS for 2 seconds.

CONNECTION DIAGRAMS

TYPICAL
1 ELEMENT CONNECTION DIAGRAM
1-OCP-XXX

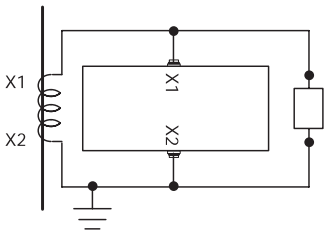

TYPICAL
3 ELEMENT CONNECTION DIAGRAM
3-OCP-XXX

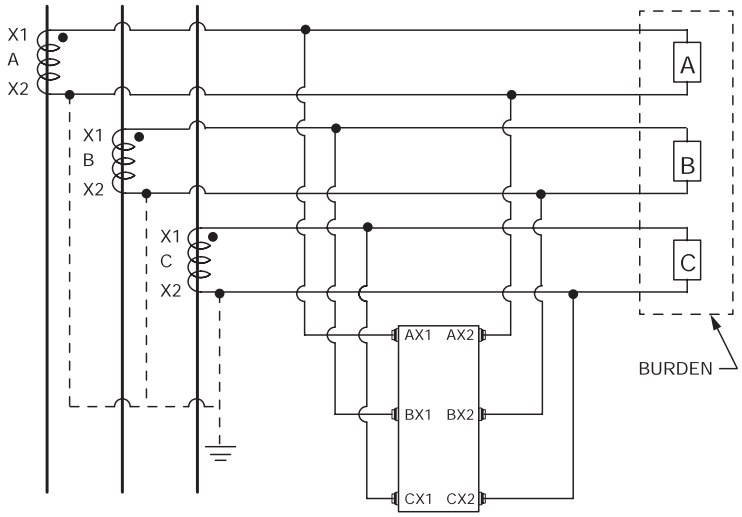

FLEX-CORE®
Div. Morlan & Associates, Inc.
4970 Scioto Darby Rd. Hilliard, Ohio 43026
WWW.FLEX-CORE.COM
sales@flex-core.com
PHONE (614) 889-6152
TECH. ASSISTANCE (614) 876-8308
FAX # (614) 876-8538

GROUND FAULT MONITOR

GROUND FAULT CURRENT DETECTOR — *MODEL* GFP

Ground Fault Current Detection with Inverse Time Capability

FEATURES

- Optional zone interlocking
- Integral test panel with "Push to Test" and "Shunt Trip Bypass"
- Power on indication (LED)
- Real time fault current level indicator
- Positive visual trip indicator
- Adjustable time delay
- Discrete current threshold adjustment
- Panel or door mounted
- Clear plastic cover
- Electro-mechanical relay output
- Optional "Form C" relay contacts
- Meets NEC Service Entrance Equipment Standards

c UL us LISTED E238418

245941

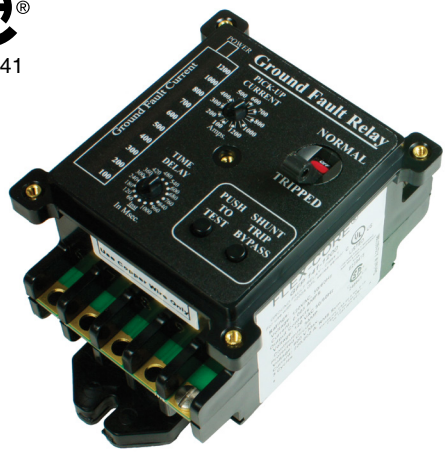

APPLICATIONS

These class 1 ground fault relays and sensors are used together to provide a system for detecting ground fault current in a grounded AC power system. When the system detects a ground fault that reaches a pre-selected current level and time delay, the relay initiates a trip signal to a shunt trip disconnect device that will open and clear the fault.

HOW TO ORDER

Model → GFP XXX - XXXX X

Mounting System
1 = Panel Mount
2 = Door Mount

Operating Voltage
1 = 24Vdc
2 = 48Vdc
3 = 125Vdc
4 = 120Vac

Interlock
1 = Without Interlock
2 = With Interlock
3 = W/O Interlock W/ Form C Contacts

Trip Current Rating
60 = 5-60Amp Trip Current
360 = 30-360Amp Trip Current
1200 = 100-1200Amp Trip Current

Time Curve
Blank = No Inverse Curve
1 = Logarithmic Curve
2 = Linear Curve

SPECIFICATIONS

Operation Range ..... Trip Currents 5-60, 30-360, and 100-1200A
Time Delay ..... Instantaneous to 1 second
Input Power..... 2VA plus shunt coil requirements
Input Withstand..... 200kA RMS for 3 cycles, 50/60Hz
Nominal Input Voltage.... 120Vac, 125Vdc, 48Vdc, or 24Vdc
Ambient Temperature Range..... -30°C to +60°C
Weight ..... 3 Lbs.

CONTACT RATING

DEVICE INPUT POWER	INRUSH	CONTINUOUS
120Vac	10A	3A
125Vdc	1A	1A
48Vdc	4A	4A
24Vac	8A	8A

FLEX-CORE®
Div. Morlan & Associates, Inc.
4970 Scioto Darby Rd. Hilliard, Ohio 43026
WWW.FLEX-CORE.COM
sales@flex-core.com
PHONE (614) 889-6152
TECH. ASSISTANCE (614) 876-8308
FAX # (614) 876-8538

GROUND FAULT MONITOR

GROUND FAULT CURRENT SENSOR — MODEL GFL

FEATURES

- UL Listed
- Window I.D. - Available up to 4.0" X 36.0"
- For use with GFP ground fault current detection system

600V CLASS



MADE IN U.S.A.

c UL us LISTED E238418

CSA® 245941

SPECIFICATIONS

Frequency 50-60Hz
Insulation Class ..... 0.6kV, 10kV BIL Full Wave
Terminals ..... Brass Studs No. 8-32 UNC with one flat washer, lock washer and regular nut.
Weight ..... Approximately 8-18 lbs.
*Rectangular sensors are also available with take apart option allowing installation without disassembly of the pimary bus or cables.

HOW TO ORDER RECTANGULAR C.T.'S

GFL - XXX X XXX XX XXX

- Model: GFL
- Window width in tenths of a inch (A1): XXX
- The letter " X" must appear here: X
- Window length in tenths of an inch (B1): XX
- Trip Current: 5-60A = 60; 30-360A = 360; 100-1200 = 1200: XXX
- Split Core: -SC; -"Blank"

Example: GFL-101X360 SC 1200

HOW TO ORDER TOROIDAL C.T.'S

GFL - XXX T - X

- Model: GFL
- Window width in tenths of a inch (A1): XXX
- T
- 1 = 5-60 Amps; 2 = 100-1200 Amps; 3 = 30-360 Amps: X

RECTANGULAR STANDARD SENSOR SIZES

A1	A2	A3	B1	B2	B3
4.1	6.4	7.3	7.1	10.0	10.9
5.1	7.2	8.3	11.7	14.5	15.4
5.8	7.0	9.0	14.1	17.0	17.9
8.0	9.5	11.1	18.1	21.0	21.9
10.1	11.6	13.2	24.0	27.0	27.9
-	-	-	30.1	33.0	33.9
-	-	-	36.0	39.0	39.8

TOROIDAL STANDARD SENSOR SIZES

MODEL NUMBER	A1	B1	B2	C1	C2	D1
GFL325T-X	3.25	5.73	4.70	4.70	5.73	1.15
GFL425T-X	4.25	6.17	N/A	4.86	5.92	1.15
GFL631T-X	6.31	8.50	6.75	6.75	8.50	1.28
GFL825T-X	8.25	10.48	8.50	8.50	10.48	1.53

DIMENSIONS

Rectangular Standard Sensor

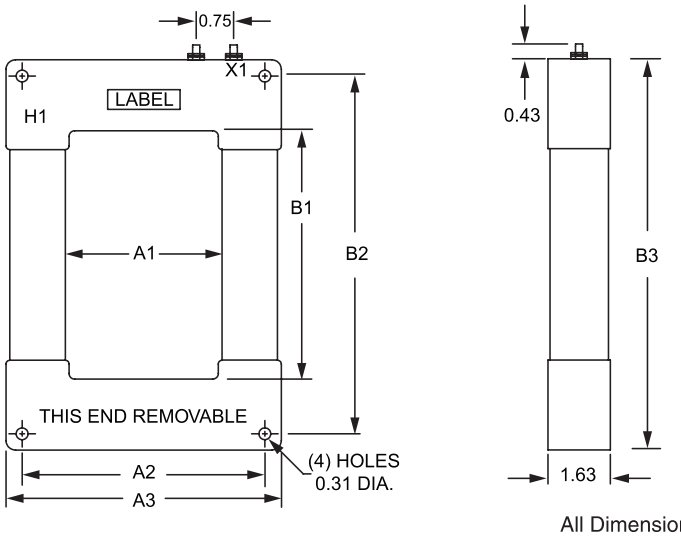

Toroidal Standard Sensor

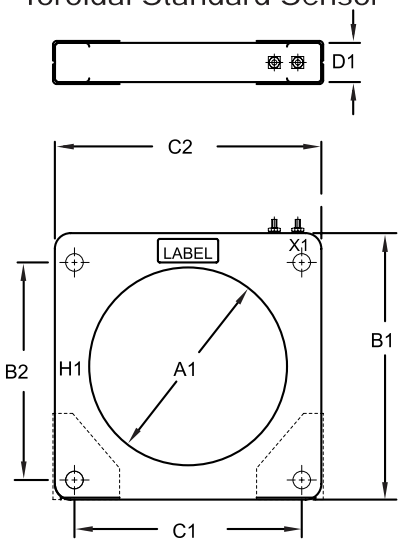

All Dimensions In Inches

CAUTION: All appropriate safety precautions must be followed for the installation of these devices including de-energizing the incoming power prior to installation. It is recommended the sensor be installed by a trained electrician. This sensor must have its secondary terminals shorted, or have the relay connected prior to energizing the primary conductors.

FLEX-CORE®
Div. Morlan & Associates, Inc.
4970 Scioto Darby Rd. Hilliard, Ohio 43026
WWW.FLEX-CORE.COM
sales@flex-core.com
PHONE (614) 889-6152
TECH. ASSISTANCE (614) 876-8308
FAX # (614) 876-8538

GROUND FAULT MONITOR

GROUND FAULT CURRENT MONITOR — *MODEL* GFP/GFL

Typical GFP Relay and Sensor Installation

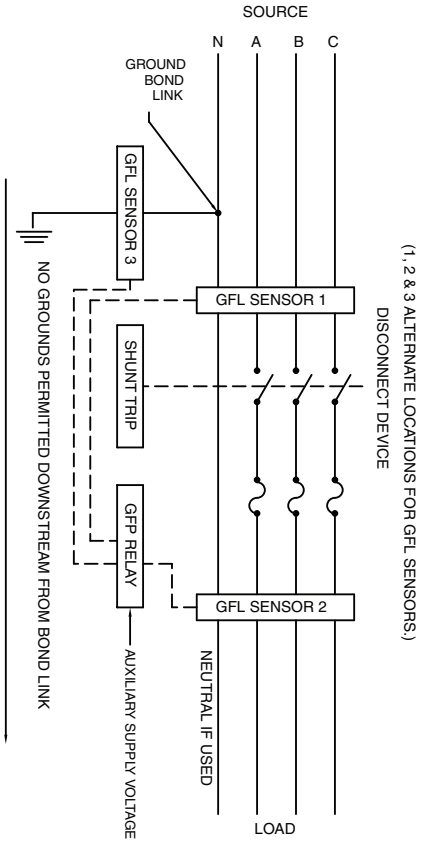

Typical Response Curves (Model GFP) with Inverse Time Function

The time delay adjustment is a 16 position switch with increments ranging from instantaneous to 1000ms

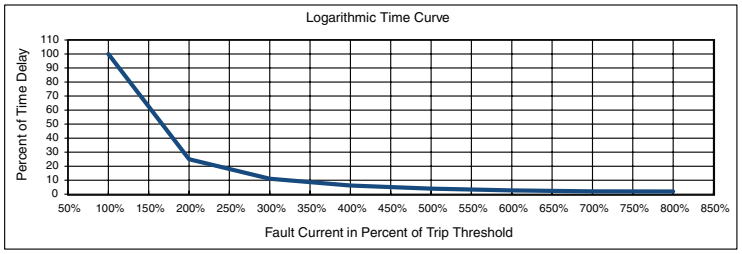

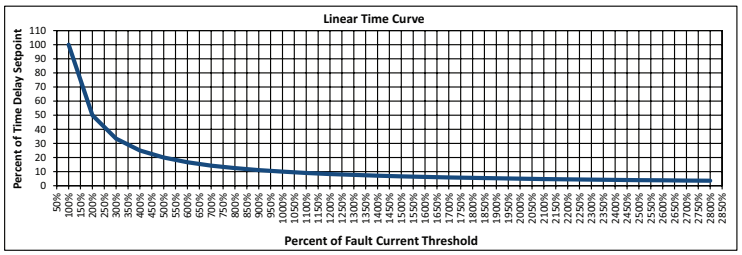

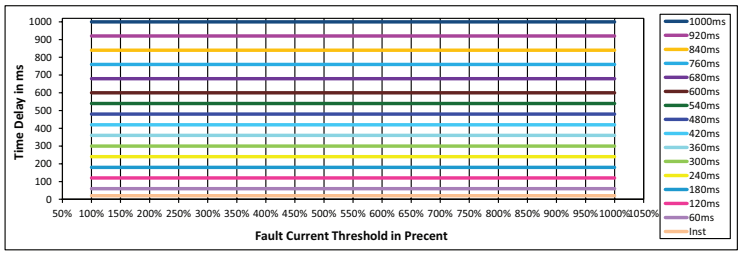

GFP Test Procedures

1) To determine if the neutral is grounded in only one place, at the service entrance, in accordance with the "National Electric Code":

a. De-energize Equipment (Disconnect Power)
b. Remove ground bond link
c. Using a megger, measure resistance of each phase and the neutral to ground. (In accordance with NEC requirements, the resistance should be 1 mega ohm).
d. Reconnect bond link
e. Reconnect power and check power indication (LED)

2) To test the entire system (including the disconnect device):

a. Verify control power LED indicator is illuminated
b. Press the "Push to Test" pushbutton on the GFP box. (The trip indicator will go to the tripped position and the disconnect device will open)
c. Reset the relay and disconnect device

3) To test the GFP Ground Fault Sensor and Relay only:

a. Verify control power LED indictor is illuminated
b. Press and hold the "Shunt to Bypass" pushbutton on the GFP box
c. Press the "Push to Test" pushbutton. (The Ground Fault Relay will trip)
d. Reset the relay, then release the "Shut trip Bypass" push button

Typical Wiring Diagram

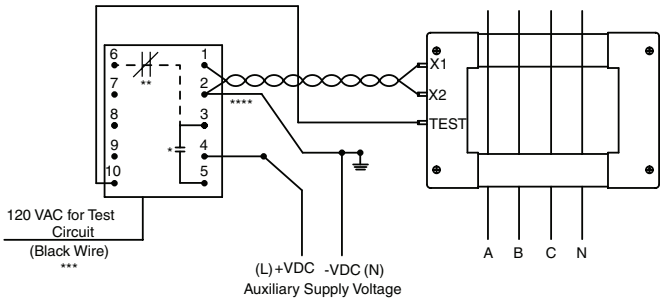

Notes:
* Standard Internal Relay Contacts (NO).
** Optional Form C contacts normally closed contact is between terminal 3 and 6.
*** The test circuit requires 120Vac be applied to the black wire with the 120V neutral on terminal 2 of the relay. Black wire is only present if GFP operating voltage is not already 120Vac.
**** For relays with DC input voltage connect 120Vac for test circuit to black lead and terminal 2.

FLEX-CORE®
Div. Morlan & Associates, Inc.
4970 Scioto Darby Rd. Hilliard, Ohio 43026
WWW.FLEX-CORE.COM
sales@flex-core.com
PHONE (614) 889-6152
TECH. ASSISTANCE (614) 876-8308
FAX # (614) 876-8538

GROUND FAULT MONITOR

GROUND FAULT CURRENT DETECTION — *MODEL* GFP

TYPICAL WIRING DIAGRAM FOR ZONE INTERLOCK SYSTEM

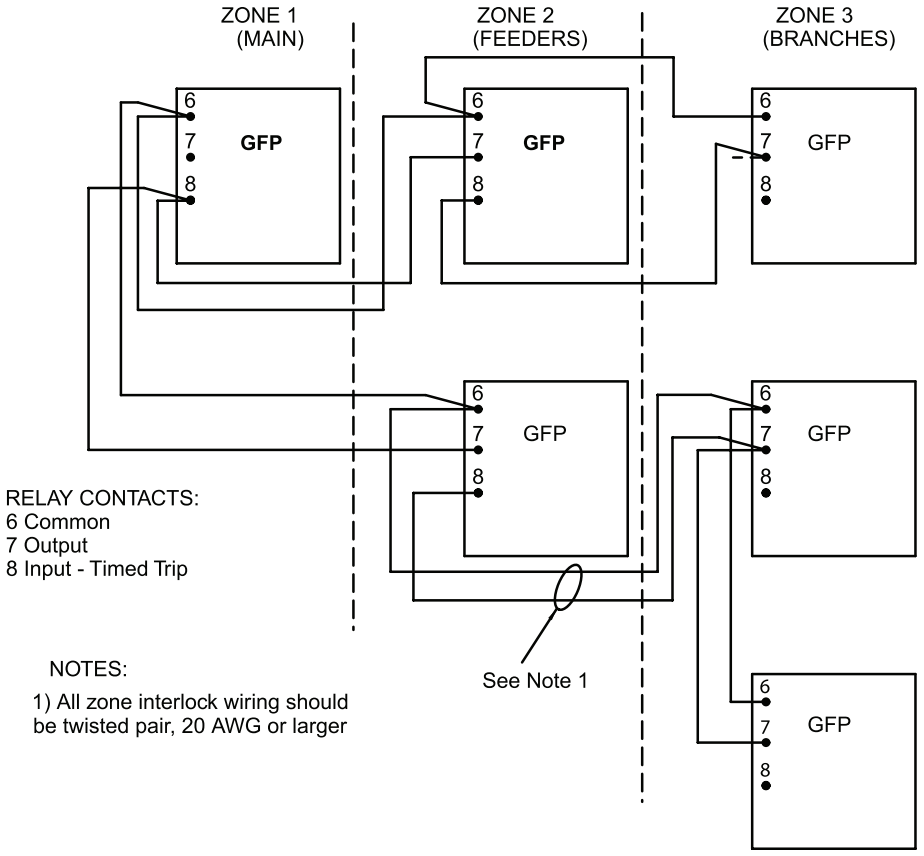

NOTES:

1) All zone interlock wiring should be twisted pair, 20 AWG or larger

DIMENSIONS

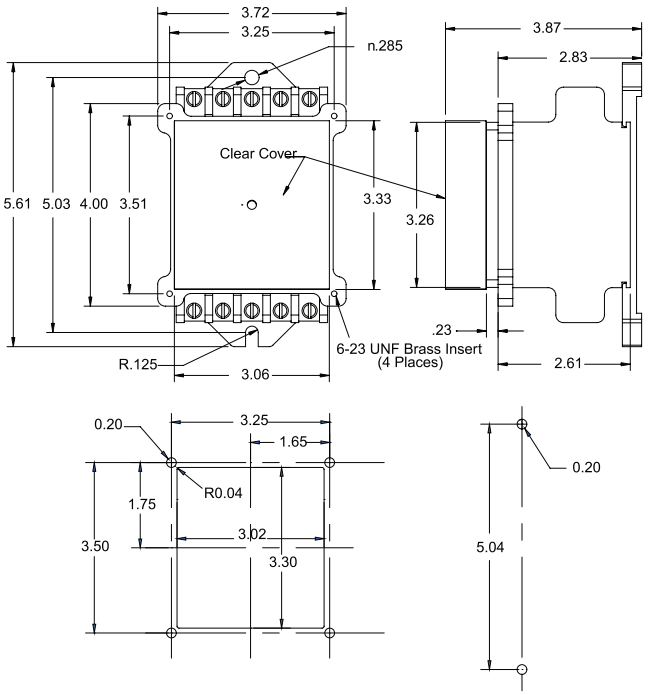

All Dimensions In Inches

FLEX-CORE®
Div. Morlan & Associates, Inc.
4970 Scioto Darby Rd. Hilliard, Ohio 43026

WWW.FLEX-CORE.COM
sales@flex-core.com

PHONE (614) 889-6152
TECH. ASSISTANCE (614) 876-8308
FAX # (614) 876-8538

AC CURRENT SET POINT RELAY

OVER/UNDER AC CURRENT SET POINT RELAY *MODEL* CRD-020

RANGES UP TO 20Aac CURRENT INPUT



FEATURES

- Programmable set point relay setting for input current, threshold levels, over and under current operation.
- Internal DIP switch to set the current ranges of either 0-5, 0-10, 0-15, or 0-20 amperes, and the relay mode for under or over current operation.
- Lid mounted two digit numerical push-button switch calibrated as percent of full-scale with a threshold range of 1 - 99%
- Red LED lamp lights to indicate when threshold level has been obtained.
- Highlighted area indicates Factory Setting. Unit is shipped from the factory with a 0-5 amp input and in an over current relay mode. The set point relay can be set to provide any one of the four current ranges and mode of operation.

INPUT AND RELAY OPERATION SETTINGS

INPUT RANGE AMPS	INTERNAL SWITCH POSITIONS 1	2	3	4	5	6	7	8
	UNDER CURRENT*							
5	ON	ON						ON
10	ON	ON					ON	
15	ON	ON				ON		
20	ON	ON			ON		ON	
	OVER CURRENT**							
	1	2	3	4	5	6	7	8
5			ON	ON				ON
10			ON	ON			ON	
15			ON	ON		ON		
20			ON	ON	ON		ON	

OPERATION OF THE OUTPUT RELAY AND LED

MODE OF OPERATION	OUTPUT TERMINAL CONNECTIONS & LED OPERATION UNDER CURRENT* 3	4	5	LED	OVER CURRENT** 3	4	5	LED
INST POWER OFF	N/C	Com	N/O	OFF	N/C	Com	N/O	OFF
INST POWER ON	N/C	Com	N/O	ON	N/O	Com	N/C	OFF
INST PWR ON CURRENT BELOW SET POINT	N/C	Com	N/O	ON	N/O	Com	N/C	OFF
INST PWR ON CURRENT ABOVE SET POINT	N/O	Com	N/C	OFF	N/C	Com	N/O	ON

OPERATIONS MODE

***Under Current**

The output relay will energize when instrument power is applied and the current is above the set point threshold. It will remain in a "Fail Safe" mode until either the input current drops below the set point threshold or instrument power is removed.

****Over Current**

The output relay will energize when instrument power is applied and will remain in a "Fail Safe" mode until either the instrument power is removed or the input current exceeds the set point threshold level.

CONNECTION DIAGRAM

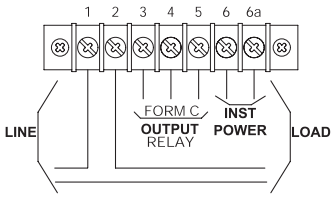

CASE DIMENSIONS

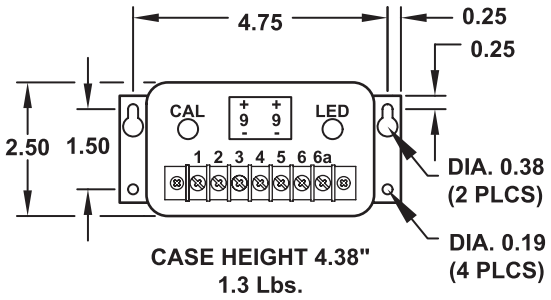

CASE HEIGHT 4.38"
1.3 Lbs.

All Dimensions In Inches

SPECIFICATIONS

INPUT

Current Ranges ..... See Table
Burden ..... Any Range ..... 0.5VA Max.
Over Current ..... Any Range 25Aac
50Aac (10 Sec/Hr)
250Aac (1 Sec/Hr)
Frequency ..... Nom. 60Hz, 50 to 425Hz
Set Point (Digital) ..... 01 - 99 %, 01 minimum
Hysteresis ..... ± 1 Digit
Dielectric Test ..... (Input/Output/Case) 1500Vac
Internal Program Switch 8 Position DIP switch
Instrument Power 85-135Vac, 50-400Hz, 2.5VA
Current Detection ..... 5A Range ..... Current at 80mA
10A Range ..... Current at 160mA
15A Range ..... Current at 200mA
20A Range ..... Current at 220mA

OUTPUT

ACCURACY ..... Setpoint ± 2 digits
Relay ..... Form C, SPDT
Rating 120Vac, 3A
Mechanical Operations ..... 1 Million
Response Time to 90% .....5A Range..... 200ms
10A Range..... 250ms
15A Range..... 350ms
20A Range..... 550ms

FLEX-CORE®
Div. Morlan & Associates, Inc.
4970 Scioto Darby Rd. Hilliard, Ohio 43026
WWW.FLEX-CORE.COM
sales@flex-core.com
PHONE (614) 889-6152
TECH. ASSISTANCE (614) 876-8308
FAX # (614) 876-8538

DC CURRENT SET POINT RELAY

DC SETPOINT RELAY — *MODEL* CRD-005

PROGRAMMABLE AS A PERCENT OF RANGE

FEATURES

- Programmable settings for either current or voltage input, threshold levels and over or under relay alarms
- Internal DIP switches may be set for either 0 - 1mAdc or 0 - 10Vdc, and may be set for under alarm or over alarm relay operation.
- Lid mounted two digit numerical push-button switch calibrated as percent of full-scale with a threshold range of 01 - 99 percent.
- Red LED lamp lights to indicate when threshold level has been obtained.
- Highlighted area indicates Factory Setting. Unit is set at factory for the 0-1mA input and in the over range alarm mode.



INPUT AND RELAY OPERATION SETTINGS

INPUT RANGE	INTERNAL SWITCH POSITIONS							
	1	2	3	4	5	6	7	8
	UNDER CURRENT*							
0-1mAdc	ON	ON			ON	ON		
0-10Vdc	ON	ON				ON		
	OVER CURRENT**							
0-1mAdc*			ON	ON	ON	ON		
0-10Vdc			ON	ON		ON		

OPERATIONS MODE

***Under Range Alarm**

The output relay will energize when instrument power is applied and the current is above the set point threshold. It will remain in a "Fail Safe" mode until either the input current drops below the set point threshold or instrument power is removed.

****Over Range Alarm**

The output relay will energize when instrument power is applied and will remain in a "Fail Safe" mode until either the instrument power is removed or the input current exceeds the set point threshold level.

OPERATION OF THE OUTPUT RELAY AND LED

OUTPUT TERMINAL CONNECTIONS & LED OPERATION								
MODE OF OPERATION	UNDER RANGE*				OVER RANGE**			
	3	4	5	LED	3	4	5	LED
INST POWER OFF	N/C	Com	N/O	OFF	N/C	Com	N/O	OFF
INST POWER ON	N/C	Com	N/O	ON	N/O	Com	N/C	OFF
INST PWR ON INPUT BELOW SET POINT	N/C	Com	N/O	ON	N/O	Com	N/C	OFF
INST PWR ON INPUT ABOVE SET POINT	N/O	Com	N/C	OFF	N/C	Com	N/O	ON

CONNECTION DIAGRAM

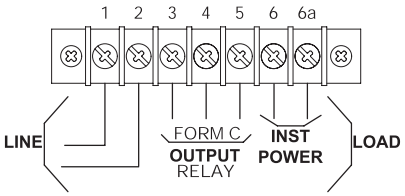

CASE DIMENSIONS

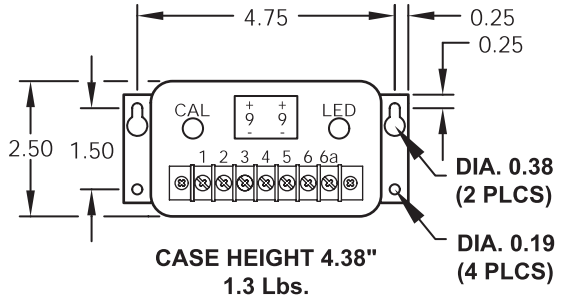

CASE HEIGHT 4.38"
1.3 Lbs.

All Dimensions In Inches

SPECIFICATIONS

INPUT

Current 1mAdc
Burden 1KΩ
Voltage 0-10Vdc
Burden 10KΩ
Resolution ..... ± 1 Digit
Hysteresis ..... ± 1 Digit
Set Point (Digital) ..... 01 - 99 %, 01 minimum
Dielectric Test ..... (Input to Output and Case) 1500Vac

OUTPUT

ACCURACY ..... Set point ± 2 digits
Relay ..... Form C, SPDT
Rating ..... 120Vac, 3 Amps
Mechanical Operations ..... 1 Million
Temperature Effect ..... (-10°C to +60°C) ..... ±0.1%/°C
Instrument Power 85-135Vac, 50-400Hz, 2.5VA
Response Time 10ms

FLEX-CORE®
Div. Morlan & Associates, Inc.
4970 Scioto Darby Rd. Hilliard, Ohio 43026
WWW.FLEX-CORE.COM
sales@flex-core.com
PHONE (614) 889-6152
TECH. ASSISTANCE (614) 876-8308
FAX # (614) 876-8538

CURRENT SWITCHES

AC CURRENT OPERATED SWITCH — *MODELS* CS, SCS

FEATURES

- Adjustable Set Point
- Self-Powered
- Smart LED
- UL Listed
- Switches AC or DC

APPLICATIONS

- Monitor AC for fans, pumps, and other electrical equipment.
- Monitors VFD application to 6Hz

E310017



Model CS-1150A-LED
(Solid-Core)



Model SCS-1150A-LED
(Split-Core)

SPECIFICATIONS

INPUT
Current
Range
CS-1150A-LED.....1-150A
SCS-1150A-LED.....1.75-150A
Trip Point Adjustment
CS-1150A-LED..... 15 Turns/Slip Clutch Pot
SCS-1150A-LED ..... 4 Turns/Slip Clutch Pot
Frequency 6-100Hz
Insulation.....600Vac

OUTPUT
Solid State Switch
Switch Rating ..... 0.3A @135Vac or Vdc
Current
On-State.....0.3 Amps Max.
Off-State.....<10µA

Temperature Range..... -20°C to +50°C

WIRING CONNECTIONS
Input.....Install unit around current carrying cable.
Size
CS-1150A-LED ..... 0.75" Round Opening
SCS-1150A-LED..... 0.85" Square Opening
Output Terminals
Screw type for 14 AWG solid or stranded,
Tighten to 5 in-lbs. Torque

HOUSING
A.B.S. General Electric Cycolac Grade KJW-4051
U.L. Flame Retardant Rating 94V-0. (Black)

SETUP & ADJUSTMENT

1.Install sensor over conductor and wire as shown in the connection diagram.

2.The sensor is shipped with the multi-turn adjustment set to the most sensitive position (CW). If the sensor now operates, turn the adjustment counter-clockwise (CCW) until the operation reverses. The smart LED will indicate this action.

3.Now turn the adjustment CW until the sensor just operates its controlled circuit. It is desirable to turn the adjustment slightly beyond this threshold point to provide a margin for normal current variations.

4.The smart LED eliminates the need for a voltmeter. The LED will switch from rapid to slow flashing when going below the trip point.

Note 1: For loads above highest range selection use an external current transformer with an appropriate ratio(I.E. 500:5), feed C.T. secondary one turn through window of unit.

Note 2: Locked rotor current of 2.5 times the range setting for longer than 5 seconds can damage the unit.

LED INDICATOR	THE LED INDICATES THREE STATES
1. Rapid Flashing	Tripped
2. Slow Flashing	Current Present but Below Set point
3. No Flashing	Current Off or Below Bottom Range

CONNECTION DIAGRAM

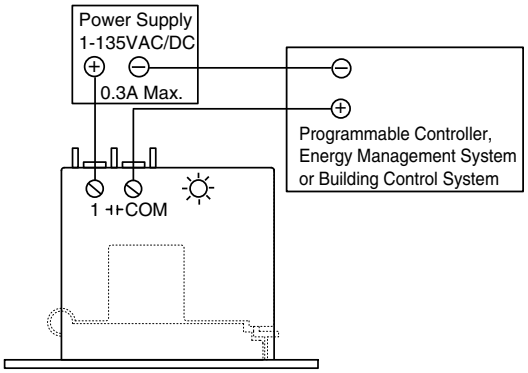

DIMENSIONS

Model CS-1150A-LED

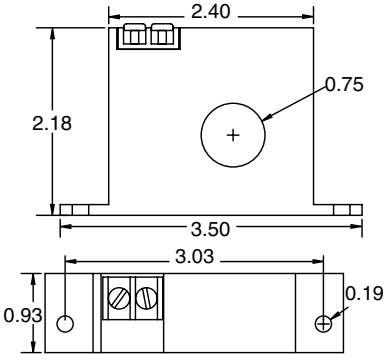

Weight.....2.9 oz.

Model SCS-1150A-LED

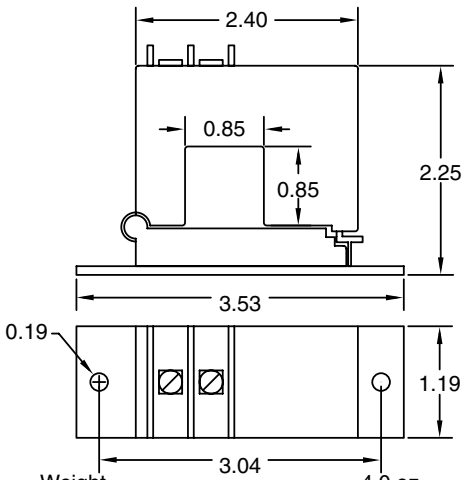

Weight.....4.0 oz.

All Dimensions In Inches

CURRENT SWITCHES

FLEX-CORE®
Div. Morlan & Associates, Inc.
4970 Scioto Darby Rd. Hilliard, Ohio 43026
WWW.FLEX-CORE.COM
sales@flex-core.com
PHONE (614) 889-6152
TECH. ASSISTANCE (614) 876-8308
FAX # (614) 876-8538

CURRENT SWITCHES

DC CURRENT OPERATED SWITCH — *MODEL* DS3-SDT-24U

FEATURES

- Hall Effect Sensor/Signal Conditioner/Limit Alarm in a Single Package
- Field Adjustable Setpoint
- Three Jumper Selectable Input Ranges
- Frequency from DC to 400Hz
- SPDT Relay (Form C) Output
- Isolated Output

E310017

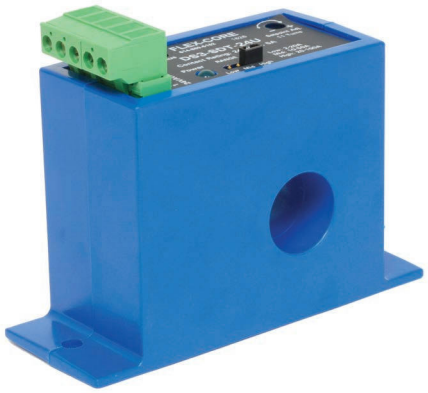

APPLICATIONS

- Heating Elements-Instant Indication of Heater Status
- Power Supplies-Signals Over Current Before Equipment Failure
- Machine Operation-Instant Status of Motors, Lamps, & Other loads
- Telecom Sites-Monitors Battery Status

SPECIFICATIONS

Selectable Set point Range	2-20A, 10-50A, 20-100A
Output Rating (Relay)	5.0A @ 240Vac 5.0A @ 30Vdc (SPDT)
Isolation Voltage	3000 Volts
Response Time (10% Above Setpoint)	100ms
Overload	1000% .5 Sec. - 200% Continuous
Power Consumption	10VA
Temperature Range	-20°C to +50°C
Humidity Range	0-95% RH, Non-Condensing
Hysteresis	5% of Setpoint
Supply Voltage	24Vac or Vdc
Case	UL 94V-0 Flammability Rated
Weight	6.5 oz.

CONNECTIONS

Power Supply
24Vac/dc

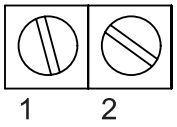

Isolated Relay Output
(Shown De-Energized)

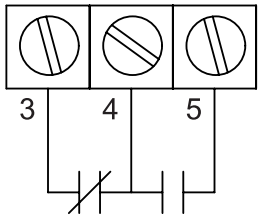

NOTE: Use 12-22 AWG Solid or Stranded Wire

DIMENSIONS

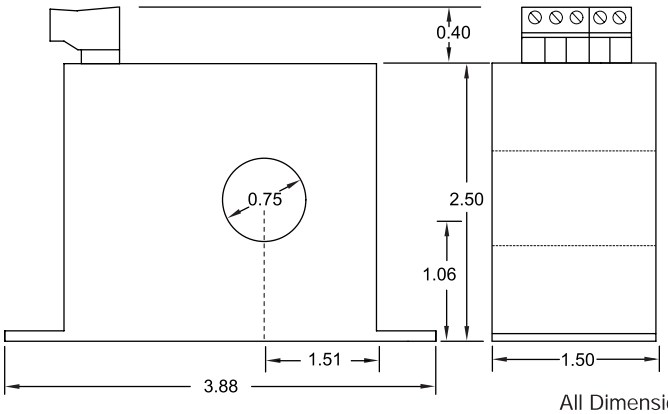

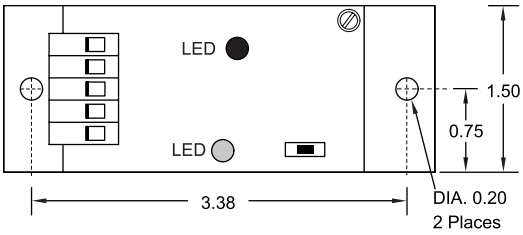

All Dimensions In Inches

FLEX-CORE®
Div. Morlan & Associates, Inc.
4970 Scioto Darby Rd. Hilliard, Ohio 43026

WWW.FLEX-CORE.COM
sales@flex-core.com

PHONE (614) 889-6152
TECH. ASSISTANCE (614) 876-8308
FAX # (614) 876-8538

CURRENT TRANSDUCERS

RMS CURRENT TRANSDUCER/SPLIT CORE C.T. *MODEL* CTRS

FEATURES

- Accurate measurement of the true RMS value of input signal.
- Split Core current sensors for easy installation.
- Open circuit protection.
- Flexible rogowski coils (air core CTs) are used for current measurement ranges of 1kAac and larger.



ORDERING INFORMATION

Example: 10kAac Input with
0-10Vdc Output, 230Vac Inst. Power and
10.5" Dia. Rogowski Coil
CTRS-103RD-22-1

SPECIFICATIONS

INPUT

Current.....See Table
Frequency Range (Non "R" Models).....50-60Hz
"R" Models.....20-2kHz
Current Overload.....2X F.S. (cont.)
5X (10 Sec. transient)
10X (1 Sec. transient)
Dielectric Test....(Input/Output/Case).....1500Vac

OUTPUT

Output Ripple..... <1.0% F.S.
Response....(90%)(Non "R" Models).....100ms
"R" Models.....300ms
Output Loading (Ω)
0-1mA.....0-10KΩ
0-10Vdc, 0-5Vdc.....2KΩ min.
4-20mA.....0-500Ω
Field Adjustable Cal..... ± 10%

ACCURACY & LINEARITY

Model 5A & 10A..... ± 0.5% F.S.
15A-1000A..... ± 0.25% F.S.
1KA-40KA(Rogowski Coil)
Set point (w/conductor centered in window)..... ± 1.0% F.S.@ 60Hz
Linearity..... ± 0.25% F.S. @ 60Hz
Position Sensitivity..... ± 2.0% F.S.
Temperature Effect.....(-20°C to +60°C)..... ± 1.0% Rdg.
Instrument Power (Std.)..... 115Vac, ± 15%, 50/60Hz, 3.5VA
Optional 230V Instr. Power..... Add Suffix "-22"
Weight..... Approximately 1.5 Lbs.

INPUT CURRENT	STANDARD OUTPUTS MODEL CTRS-			
	0-1mAdc	4-20mAdc	0-10Vdc	0-5Vdc
0 to 5	005B	005E	005D	005X5
0 to 10	010B	010E	010D	010X5
0 to 15	015B	015E	015D	015X5
0 to 20	020B	020E	020D	020X5
0 to 25	025B	025E	025D	025X5
0 to 50	050B	050E	050D	050X5
0 to 100	101B	101E	101D	101X5
0 to 200	201B	201E	201D	201X5
0 to 300	301B	301E	301D	301X5
0 to 400	401B	401E	401D	401X5
0 to 500	501B	501E	501D	501X5
0 to1000	102B	102E	102D	102X5
0 to 1K	102RB	102RE	102RD	102RX5
0 to 2K	202RB	202RE	202RD	202RX5
0 to 5K	502RB	502RE	502RD	502RX5
0 to 10K	103RB	103RE	103RD	103RX5
0 to 15K	153RB	153RE	153RD	153RX5
0 to 20K	203RB	203RE	203RD	203RX5
0 to 25K	253RB	253RE	253RD	253RX5
0 to 30K	303RB	303RE	303RD	303RX5
0 to 40K	403RB	403RE	403RD	403RX5

CONNECTION DIAGRAM

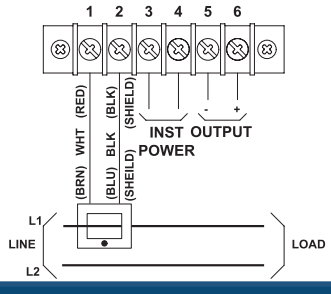

DIMENSIONS

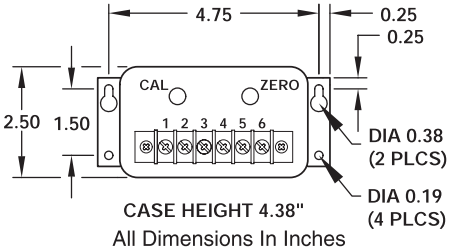

All Dimensions In Inches

SENSOR DIMENSIONS (5A to 1000A)

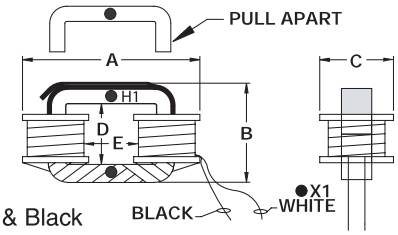

Lead Lengths
72",16 AWG, White (X1) & Black

INPUT AMPS AC	SENSOR SIZE	DIMENSIONS					WT. LBS.
		A	B	C	D	E	
5-100	A	2.80	2.00	1.12	1.09	1.09	0.4
200-500	B	3.85	3.80	1.30	2.40	1.25	0.8
1000	C	5.50	4.90	1.60	3.15	3.20	1.5

SENSOR DIMENSIONS (1000A to 40KA)

Sensor ID
Standard.....6.5".....23.6" in Length
Option "-1".....10.5".....35.4" in Length
Option "-2".....14".....47.2" in Length
Option "-3".....21.5".....70.9" in Length

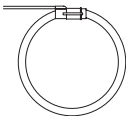

CAUTION: To prevent damage to power lines, transducer or personnel, **NEVER** connect the current inputs directly or use 5 amp secondary current transformers, always use the transformers provided with the unit.

FLEX-CORE®
Div. Morlan & Associates, Inc.
4970 Scioto Darby Rd. Hilliard, Ohio 43026
WWW.FLEX-CORE.COM
sales@flex-core.com
PHONE (614) 889-6152
TECH. ASSISTANCE (614) 876-8308
FAX # (614) 876-8538

CURRENT TRANSDUCERS

SPLIT CORE CURRENT TRANSFORMER/TRANSDUCER *MODEL* SCT

DESCRIPTION

The SCT is an integrated split core current transformer and transducer which provides an output proportional to current ranges up to 500 amperes. The SCT has models which provide either a self-powered 0-1mAdc or 0-5Vdc or a loop-powered 4-20mAdc output.

The dc output is proportional to the average absolute value of the input and is calibrated to represent the RMS value. The SCT is capable of accurately measuring ac inputs from 50 to 400Hz.

INPUT AC AMPS	STANDARD OUTPUTS MODEL SCT-		
	0-1mAdc*	4-20mAdc**	0-5Vdc*
0-50	050A	050E2	050CX5
0-100	100A	100E2	100CX5
0-200	200A	200E2	200CX5
0-300	300A	300E2	300CX5
0-400	400A	400E2	400CX5
0-500	500A	500E2	500CX5

FEATURES

- Insensitive to polarity.
- Split Core design for easy installation.
- Accurate and reliable from 50 to 400Hz

APPLICATIONS

- Designed for applications requiring accurate current measurements.



c UL us LISTED
E500652

ORDERING INFORMATION
Example: 100Aac Input with 4-20mA Loop Powered Output
SCT-100E2

***0-1mAdc & 0-5Vdc self-powered from measured line.**
****4-20mAdc Loop-powered (15-40Vdc supply required)**

SPECIFICATIONS

INPUT
Current..... See Table
Frequency Range ..... 50 to 400Hz
Burden .....0.5VA max.
Current overload..... 5 X Rating for 10 sec./hr
Dielectric Test...(Input/Output/Case). 1800Vac

INSTRUMENT POWER
*Self-Powered..... 1mAdc & 5Vdc Models
**Loop-Powered.....15-40Vdc supply required

OUTPUT
Output Ripple.....< 0.5% F.S.
Response (90%).....< 300ms
Output Loading (Ω).....1mA 0-10KΩ
5Vdc ..... > 100KΩ
4-20mA.....0-500Ω
ACCURACY .... (25° C, 60Hz)..... ± 0.5 % F.S.
(All conditions) .....± 0.7 % F.S.
Temperature Range..... -20°C to +60°C
Weight ..... 1.0 Lb.

DIMENSIONS

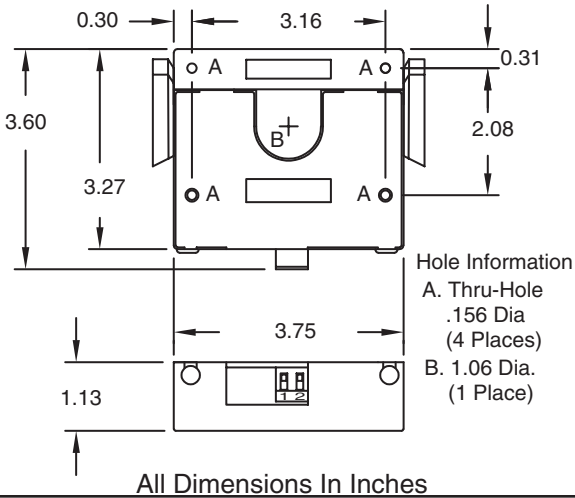

All Dimensions In Inches

CONNECTION DIAGRAMS

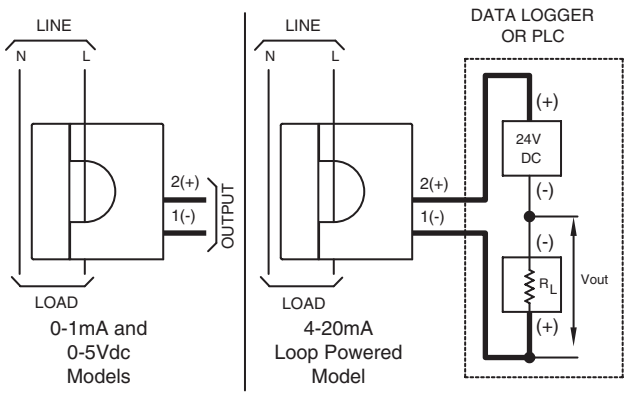

FLEX-CORE®
Div. Morlan & Associates, Inc.
4970 Scioto Darby Rd. Hilliard, Ohio 43026
WWW.FLEX-CORE.COM
sales@flex-core.com
PHONE (614) 889-6152
TECH. ASSISTANCE (614) 876-8308
FAX # (614) 876-8538

CURRENT TRANSDUCERS

AC CURRENT TRANSFORMER/TRANSDUCER *MODELS* H921, H922, H923

Low Cost AC Split Core Current Transducer

FEATURES

- The H921,H922, and H923 split core current sensors provide accurate load trending information with a proportional output signal. Preset slide switches provide easy field setup of sensed amperage range.
- Self-gripping split core for fast retrofit installation.
- Three factory calibrated switch selectable ranges for high resolution and installation ease.
- Mounting bracket for installation flexibility.

CE

c UL US LISTED 3T60 UL508 E150462



Model H921



Model H923

ORDERING INFORMATION		
CATALOG NUMBER	AMPERAGE RANGE	OUTPUT TYPE
H921	0-30/60/120A	4-20mAdc, Loop Powered
H922	0-30/60/120A	5Vdc, Self Powered
H923*	0-20/100/150A	10Vdc, Self Powered

*CE Only. Not UL Listed.

APPLICATIONS

- Load Trending
- Motor Control

SPECIFICATIONS

Amperage Range ..... See Table
Output ..... See Table
Insulation Class ..... (H921,H922) ..... 600Vac RMS
(H923) ..... 300Vac RMS
Frequency 50/60Hz
Temperature Range ..... -15°C to +60°C
Humidity Range ..... 10-90% non-condensing
Accuracy .... ±2% F.S. from 10% to 100% (selected range)
Response Time ..... 2 sec.
Supply Voltage .... (H921 only) .... 12-30Vdc Loop powered
Supply Current .... (H921 only) ..... 30mA (max.)
Dimensions ..... 3.10"L x 2.58"W x 1.40"H
Sensor opening size ..... 1.10"L x .80"W
Weight ..... 6.0 oz.
Accessories
TMP15124C...Universal Power Supply(15 Watts, 24Vdc)

DIMENSIONS

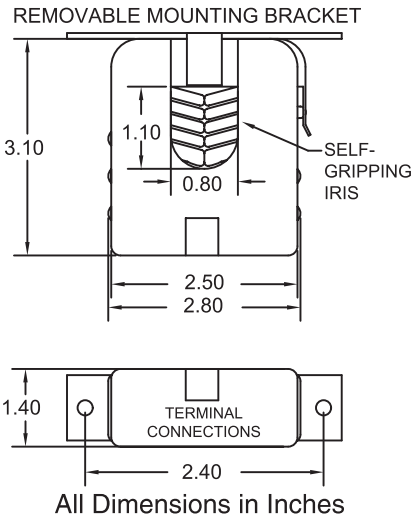

All Dimensions in Inches

CONNECTIONS

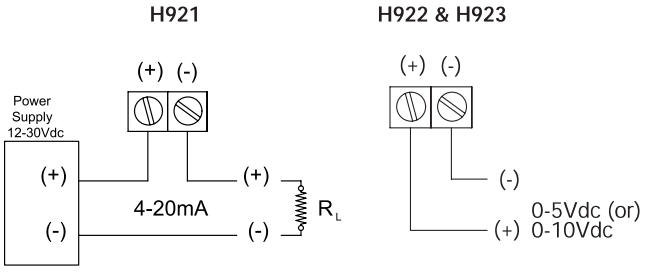

LINEAR OUTPUT

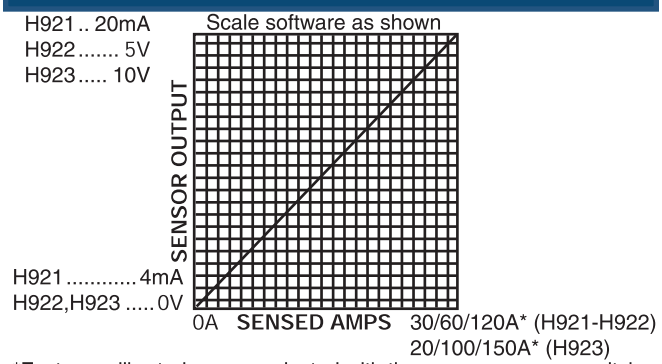

*Factory calibrated ranges selected with the amperage range switch.

FLEX-CORE®
Div. Morlan & Associates, Inc.
4970 Scioto Darby Rd. Hilliard, Ohio 43026
WWW.FLEX-CORE.COM
sales@flex-core.com
PHONE (614) 889-6152
TECH. ASSISTANCE (614) 876-8308
FAX # (614) 876-8538

CURRENT TRANSDUCERS

AC CURRENT TRANSFORMER/TRANSDUCER *MODELS* H221, H321, H421

FEATURES

- The H221/321/421 analog current sensors provide reliable load trending information for large motor loads (up to 2400A) with a proportional 4-20mAdc signal.
- Each sensor can be calibrated for maximum resolution using the span potentiometer.
- Split-Core design is ideal for load trending.

ORDERING INFORMATION		
CATALOG NUMBER	ADJUSTABLE F.S. AC INPUT AMPERES	DC OUTPUTS
H221	100-300A	4-20mA
H321	300-800A	4-20mA
H421*	1000-2400A	4-20mA

*H421 is not UL Listed

Model H421



Model H221 Model H321

c UL US
LISTED 3T60 UL508
E150462

SPECIFICATIONS

ADJUSTABLE FULL SCALE AMPERAGE RATING
- Model 221 ..... 100-300A
- Model 321 ..... 300-800A
- Model 421 ..... 1000-2400A

Sensor Supply Voltage .....12 to 30Vdc
Sensor Supply Current .....30mA max.
Isolation .....600Vac RMS
Frequency Range .....50/60Hz nominal
Accuracy...± 2% F.S. from 10% to 100% selected range
Temperature Range.....-15°C to +60°C
Humidity Range.....0-95% non-condensing
Response Time..... 2 sec.
Optional Accessories
TMP15124C .....24Vdc Power Supply
CT Bracket.....P/N AH06
Max Terminal Block Wire Size ..... 12 AWG

CONNECTIONS

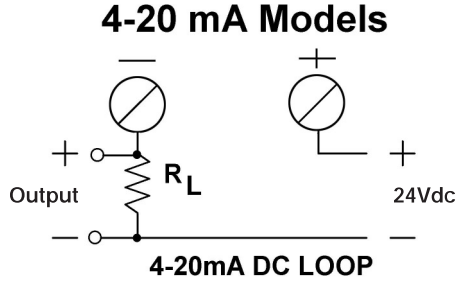

DIMENSIONS

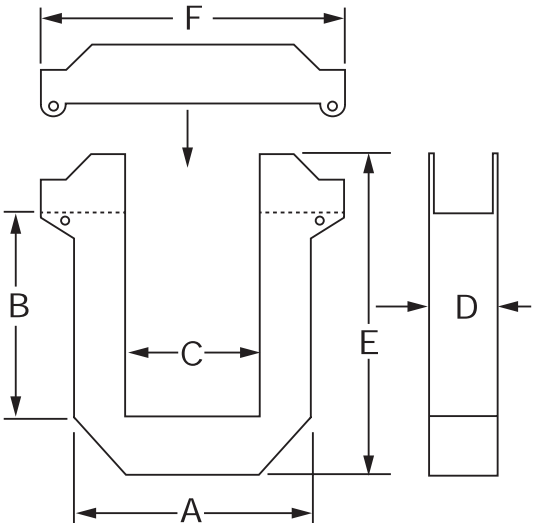

H221		H321		H421	
A	3.70"	A	4.90"	A	4.90"
B	1.60"	B	2.90"	B	5.50"
C	1.40"	C	2.50"	C	2.50"
D	1.10"	D	1.20"	D	1.10"
E	4.20"	E	5.5"	E	8.10"
F	4.75"	F	6.00"	F	6.00"
WT.	1.0 Lbs.	WT.	1.5 Lbs.	WT.	2.0 Lbs.

All Dimensions In Inches

FLEX-CORE®
Div. Morlan & Associates, Inc.
4970 Scioto Darby Rd. Hilliard, Ohio 43026
WWW.FLEX-CORE.COM
sales@flex-core.com
PHONE (614) 889-6152
TECH. ASSISTANCE (614) 876-8308
FAX # (614) 876-8538

CURRENT TRANSDUCERS

AC CURRENT TRANSDUCER/TRANSFORMER *MODEL* CTC

FEATURES

The CTC Series of AC Current Transducers provide a self-powered 0-5Vdc or 0-10Vdc output or a loop-powered 4-20mAdc output proportional to window amperes. The output is derived from the average absolute value of the input and calibrated to the RMS value of a sine wave input.

- Insensitive to polarity
- Designed for applications requiring accurate current measurements
- Easy to install

c UL us LISTED
E167120



SPECIFICATIONS

INPUT
Current Range ..... See Table
Current Overload ..... 1.3X Rating Continuous
5X Rating for 10 sec./Hr.
Frequency 50-60Hz
Dielectric Test . Input/Output/Case 1800Vac
Instrument Power
(0-5V, 0-10V Models) ..... Self-Powered
(4-20mA Models)... Loop Powered, 24Vdc, ±4Vdc
OUTPUTS ..... See Table
Load on Output
(0-5V, 0-10V Models) ..... >10MΩ
(4-20mA Models)..... 0 to 500Ω
Ripple ..... < ± 0.5% F.S.
Response Time 90% .....(Typical) 300ms
5A & 10A ..... < 750ms
ACCURACY ..... 0.25%F.S.
(Includes Linearity, Set Point and Repeatability @ 60Hz)
Temperature Effect....(-20° C to +60° C) ..... ±1%Rdg.
Weight ..... 5.0 oz.

ORDERING INFORMATION

Example: 25Aac Input with
4-20mA Loop Powered Output
CTC-025E2

INPUT AC AMPS	STANDARD OUTPUTS MODEL CTC-		
	5Vdc*	10Vdc*	4-20mA**
0-5	005CX5	005C	005E2
0-10	010CX5	010C	010E2
0-15	015CX5	015C	015E2
0-20	020CX5	020C	020E2
0-25	025CX5	025C	025E2
0-30	030CX5	030C	030E2
0-35	035CX5	035C	035E2
0-40	040CX5	040C	040E2
0-50	050CX5	050C	050E2

* 5V and 10V models are self-powered from measured line.
**4-20mA loop-powered models require an external 24Vdc power supply.
NOTE: E2 models are not CE listed.

CONNECTIONS

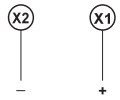

Self Powered-Option

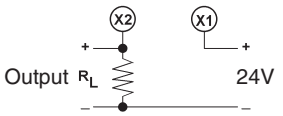

Loop Powered-Option E2

DIMENSIONS

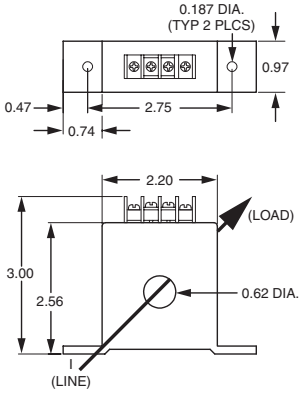

All Dimensions In Inches

FLEX-CORE®
Div. Morlan & Associates, Inc.
4970 Scioto Darby Rd. Hilliard, Ohio 43026
WWW.FLEX-CORE.COM
sales@flex-core.com
PHONE (614) 889-6152
TECH. ASSISTANCE (614) 876-8308
FAX # (614) 876-8538

CURRENT TRANSDUCERS

RMS CURRENT TRANSDUCER/TRANSFORMER *MODEL* CTCR

DESCRIPTION

The CTCR series of transducers provide a non-contact, loop powered, method of current measurement. The dc output is directly proportional to the true RMS value of ac window current. Measurement ranges of 1A to 100A are available.



FEATURES

- ±0.25% accuracy (±0.5% on 1A model)
- True RMS measurement
- Non-contact
- Loop-powered
- Ease of installation

SPECIFICATIONS

INPUT

Current Range ..... (See Table)
Over-Range w/o damage .... Continuous .. 1.3X Rating
Transient ..... 5X Rating
Frequency Range 50-400Hz

OUTPUT

Type ..... 2-Wire ..... 4-20mAdc, loop powered
Scaling ..... 0-F.S. Input = 4-20mAdc Output
Loading ..... 24Vdc Loop Power 0-500Ω
15Vdc Loop Power 0-400Ω
Response ... to 90% ..... 250ms, Typical
Ripple ..... ≤1.0% F.S. pk-pk

DIELECTRIC TEST

Conductor Through Window to Output 2200Vac

INSTRUMENT POWER

Loop-Powered ..... Nominal 24Vdc
Range 15-35Vdc

ACCURACY (setpoint, linearity, repeatability)

1A Model
50/60Hz ..... 10-100% F.S. ..... ±0.5% F.S.
All Other ..... ±2% F.S. Typical
5A-100A Models
50/60Hz ..... 10-100% F.S. ..... ±0.25% F.S.
All Other ..... ±1% F.S. Typical

TEMPERATURE

Operating ..... Range ..... -20°C to +60°C
Effect ..... ±1.0% F. S.

PHYSICAL

Termination ..... No. 6-32 Screw Terminals
Enclosure ..... ABS, Black, UL94V-0
Weight ..... Approximately 0.2 Lb.

INPUT Aac	CATALOG NUMBER (4-20mAdc LOOP-POWERED)
0-1	CTCR-001E2
0-5	CTCR-005E2
0-10	CTCR-010E2
0-15	CTCR-015E2
0-20	CTCR-020E2
0-25	CTCR-025E2
0-30	CTCR-030E2
0-35	CTCR-035E2
0-40	CTCR-040E2
0-50	CTCR-050E2
0-100	CTCR-100E2

CONNECTIONS

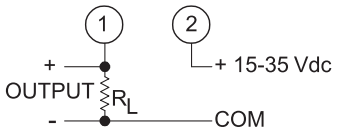

DIMENSIONS

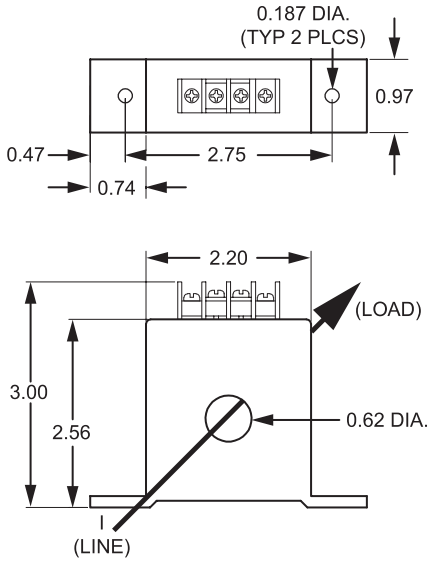

All Dimensions In Inches

FLEX-CORE®
Div. Morlan & Associates, Inc.
4970 Scioto Darby Rd. Hilliard, Ohio 43026
WWW.FLEX-CORE.COM
sales@flex-core.com
PHONE (614) 889-6152
TECH. ASSISTANCE (614) 876-8308
FAX # (614) 876-8538

CURRENT TRANSDUCERS

AC CURRENT TRANSDUCER/TRANSFORMER *MODEL* CTD

FEATURES

- The CTD Series of AC Current Transducers provide a DC output which is proportional to the AC current input. The output is derived from the average absolute value of the input and calibrated as the RMS value of the Sine Wave
- Ideal for applications where space is a consideration.
- Transformer and Transducer are housed in one case.

c UL us LISTED E500652

CE



SPECIFICATIONS

INPUT

Current Range ..... See Table
Over Range .....1.3X Rating, 5X Rating for 10 Sec/hr
Frequency..... 50-400Hz
Dielectric Test.....Input/Output/Case 1800Vac
Instrument Power
(1mAdc, 5Vdc, 10Vdc Models) .... Self-Powered
(4-20mAdc Models) ..... 24Vdc ± 4Vdc
OUTPUTS ..... See Table
Load on Output
(1mA Models) .....0 to 10KΩ
(5V, 10V Models) .....> 10MΩ
(4-20mA Models) ..... 0 to 500Ω
Ripple .....< ± 0.5% F.S.
Response Time 90% ..... 300ms.
ACCURACY ..... ±0.5% F.S.
(Includes Linearity, Nominal Frequency and Set Point)
Temperature Effect....(-20°C to +60°C) .....±1% F.S.
Weight ..... 1.1 Lbs.

ORDERING INFORMATION

Example: 50Aac Input with
4-20mA Loop-Powered Output.
CTD - 050E2

INPUT AC AMPS	STANDARD OUTPUTS MODEL CTD-			
	5Vdc**	10Vdc**	1mAdc	4-20mAdc*
0-50	050CX5	050C	050A	050E2
0-100	100CX5	100C	100A	100E2
0-200	200CX5	200C	200A	200E2
0-300	300CX5	300C	300A	300E2
0-400	400CX5	400C	400A	400E2
0-500	500CX5	500C	500A	500E2
0-600	600CX5	600C	600A	600E2
0-800	800CX5	800C	800A	800E2
0-1000	1000CX5	1000C	1000A	1000E2

*Requires 24Vdc ± 4Vdc (Loop Powered)
*E2 models are not CE Listed.
**Voltage output models are not UL listed.

CONNECTIONS

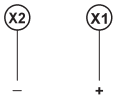

Self Powered-Option

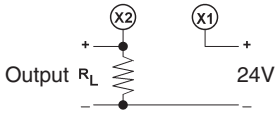

Loop Powered-Option E2

DIMENSIONS

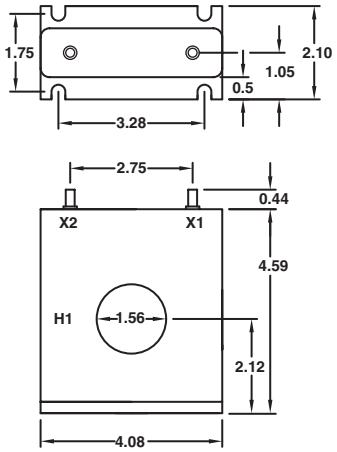

All Dimensions In Inches

CURRENT TRANSDUCERS

FLEX-CORE®
Div. Morlan & Associates, Inc.
4970 Scioto Darby Rd. Hilliard, Ohio 43026
WWW.FLEX-CORE.COM
sales@flex-core.com
PHONE (614) 889-6152
TECH. ASSISTANCE (614) 876-8308
FAX # (614) 876-8538

CURRENT TRANSDUCERS

AC CURRENT TRANSDUCER/TRANSFORMER *MODELS* AT, ATR (0,1,2)

FEATURES

- The AT & ATR (0,1,2) series of AC Current Transducers provide a proportional analog output. Average responding (AT) and true RMS (ATR) designs are available.
- Jumper selectable input ranges
- Magnetically isolated output
- Available in solid or split-core designs
- UL/CE Approved

c UL us CE RoHS COMPLIANT

E310017

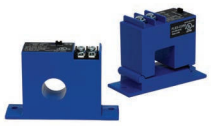

MADE IN USA

SPECIFICATIONS

Current Range ..... See Table
Frequency
- ATx-005 or 010 ..... 50-60Hz
- ATx-420 ..... 20-100Hz
- ATRx-420 ..... 10-400Hz

Isolation Voltage ..... 1270Vac (Tested to 5kV)
Temp. Range ..... -20° C to +50° C
Humidity Range ..... 0-95% RH, Non-Condensing
Accuracy ..... 1.0% F.S.
Response Time
- ATx-005 or 010 ..... 100ms
- ATx-420 ..... 300ms
- ATRx-420 ..... 600ms

Supply Voltage
- ATx-005 or 010 ..... Self-Powered
- ATx-420 ..... 12-40Vdc Loop Powered
- ATRx-420 ..... 12-40Vdc Loop Powered

Weight ..... 0.5 Lb.

CONNECTIONS

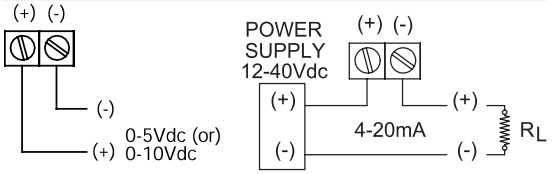

5V & 10V Models
Direct Connection

4-20mA Models
Loop-Powered Connection

AVERAGE RMS RESPONDING			
SPLIT CORE (SP)			
AC INPUT (AMP) (JUMPER SELECTED)	*4-20mA OUTPUT	**0-5V OUTPUT	**0-10V OUTPUT
0-2 0-5	AT0-420-24L-SP	N/A	N/A
0-10 0-20 0-50	AT1-420-24L-SP	AT1-005-000-SP	AT1-010-000-SP
0-100 0-150 0-200	AT2-420-24L-SP	AT2-005-000-SP	AT2-010-000-SP
SOLID CORE (FT)			
0-2 0-5	AT0-420-24L-FT	N/A	N/A
0-10 0-20 0-50	AT1-420-24L-FT	AT1-005-000-FT	AT1-010-000-FT
0-100 0-150 0-200	AT2-420-24L-FT	AT2-005-000-FT	AT2-010-000-FT

TRUE RMS 4-20mA OUTPUT			
SPLIT CORE (SP)		SOLID CORE (FT)	
AC INPUT (AMP) (JUMPER SELECTED)	*4-20mA OUTPUT	AC INPUT (AMP) (JUMPER SELECTED)	*4-20mA OUTPUT
0-2 0-5	ATR0-420-24L-SP	0-2 0-5	ATR0-420-24L-FT
0-10 0-20 0-50	ATR1-420-24L-SP	0-10 0-20 0-50	ATR1-420-24L-FT
0-100 0-150 0-200	ATR2-420-24L-SP	0-100 0-150 0-200	ATR2-420-24L-FT

*4-20mA Models are Loop-Powered (12-40Vdc)
**0-5V & 0-10V Output Models are Self-Powered

DIMENSIONS

FT (Solid Core)

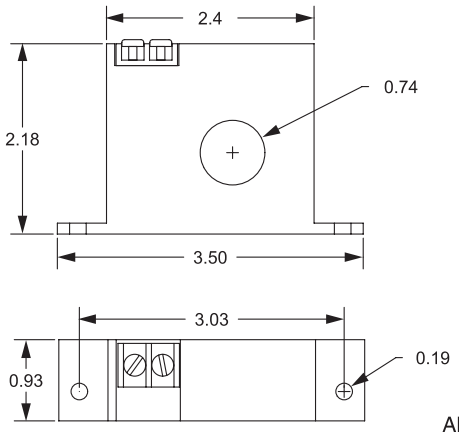

SP (Split Core)

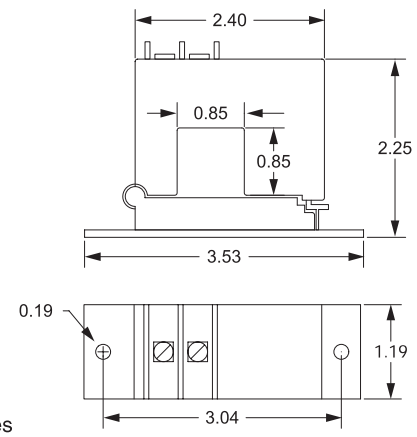

All Dimensions In Inches

FLEX-CORE®
Div. Morlan & Associates, Inc.
4970 Scioto Darby Rd. Hilliard, Ohio 43026

WWW.FLEX-CORE.COM
sales@flex-core.com

PHONE (614) 889-6152
TECH. ASSISTANCE (614) 876-8308
FAX # (614) 876-8538

CURRENT TRANSDUCERS

AC CURRENT TRANSDUCER/TRANSFORMER *MODELS* AT, ATR(3,4)

DESCRIPTION

- The AT/ATR(3,4) Series AC High Current Transducers with Current Output can be used to directly monitor up to 2000A without requiring an additional current transformer. The output from these transducers is a 4-20mA signal.

FEATURES

- Eliminates the need for a current transformer
- Large 3" aperture to accomodate large conductors or wire bundles.
- Loop-powered 4-20mA output
- Multi range input eliminates zero and span adjustments
- Easy installation with integral mounting brackets
- Average RMS (AT Models)
- True RMS (ATR Models)

c UL us
E310017

CE

RoHS COMPLIANT

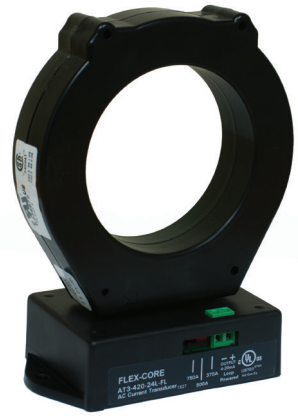

SPECIFICATIONS

Output..... 4-20mA, Loop-Powered
Supply Voltage..... 24-40Vdc
Output Load..... 600Ω Max @24Vdc
Rmax = (V supply-12)/0.020
Accuracy..... 1.0% F.S.
Frequency..... (AT: 50-60Hz) (ATR: 10-400Hz)
Response Time..... 600ms to 90% of step change
Case ..... UL 94V-O flammability rated thermoplastic
Weight ..... 1.3 Lbs.
Insulation Class 600Vac
Over Range Limit.... Sensor Self-Limits to 23mA Output
Termination..... Screw Terminals

Note: The AT models are average responding. The ATR models are variable frequency integration models for monitoring the load side of a VFD or distorted AC waveforms.

CATALOG NUMBER	ORDERING INFORMATION
AT3-420-24L-FL **ATR3-420-24L-FL**	Solid Core High Current Transducer **0-750A**, 4-20mA Output
AT4-420-24L-FL **ATR4-420-24L-FL**	Solid Core High Current Transducer **0-2000A**, 4-20mA Output

MODEL	RANGE	SWITCH POSITION	MAX CONT	MAX FOR 6 SEC	MAX FOR 1 SEC
			(Amps)		
AT3 ATR3	0-375	375	750	1500	3750
	0-500	500			
	0-750	750			
AT4 ATR4	0-1000	1000	2000	4000	10,000
	0-1333	1333			
	0-2000	2000			

DIMENSIONS

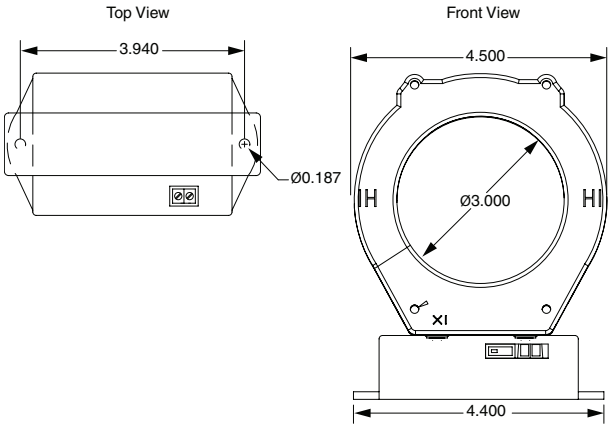

All Dimensions In Inches

CONNECTIONS

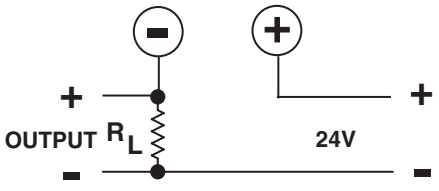

CURRENT TRANSDUCERS

FLEX-CORE®
Div. Morlan & Associates, Inc.
4970 Scioto Darby Rd. Hilliard, Ohio 43026
WWW.FLEX-CORE.COM
sales@flex-core.com
PHONE (614) 889-6152
TECH. ASSISTANCE (614) 876-8308
FAX # (614) 876-8538

CURRENT TRANSDUCERS

AC CURRENT TRANDUCER — MODEL MCT5

DIN RAIL MOUNTED AC CURRENT TRANSDUCER

FEATURES

- Ruggedized Polyamide DIN mount case.
- Slim profile allows maximum use of available space.
- Field selectable analog outputs. "A" Models only.
- Recessed terminals provide increased safety.

INPUT	STANDARD OUTPUTS MODEL MCT5-		
AC AMPS	0-1mAdc*	4-20mAdc	4-20mAdc**
0 to 1 0 to 5	001A 005A	001E 005E	001E2 005E2

*Models are self-powered from measured AC input line with **DIP switch selectable 0-1mA, 0-5Vdc, or 0-10Vdc output.**
**Denotes 4-20mA loop-powered unit, (15-40Vdc).
All other units require 85-135Vac instrument power.
1" wide case can be mounted on Rail EN50035 (DIN 1) or Rail EN50022 (DIN2).
Transducer output is derived from the average absolute value of the input and calibrated as the RMS value of a sine wave input.

APPLICATIONS

- Ideal for use in enclosures with dimensional constraints.
- Designed for industrial environments.
- OEM measurement systems.
- Designed for use with current transformers.
- Easily integrated into control systems.

RoHS COMPLIANT

c UL us LISTED E500652



ORDERING INFORMATION
Example: 0-5A Input with 4-20mA Output.
MCT5-005E

SPECIFICATIONS

INPUT
Current ..... See Table
Frequency Range ..... 48 to 65Hz, 60Hz Nom.
Burden ..... 1 Amp models 0.05VA
5 Amp models 0.175VA
Current Overload
2 X Full Scale Rating ..... (continuous)
10 X Full Scale Rating ..... (10Sec./Hr.)
Dielectric Test...(Input/Output) 1500Vac

OUTPUT
Output Ripple ..... <1.0% F.S.
Response Time ..... (99%) 400ms
Field Adjustable Span ..... ± 5%
Termination ..... Wire Size 22 to 12 AWG

OUTPUT LOADING (Ω)
4-20mA 0-500
4-20mA(24V Loop Power) 0-600
Field Selectable
0-1mA 0-10K
0-5Vdc ..... >5M
0-10Vdc ..... >10M

ACCURACY (@ 60Hz) ..... **±0.25% F.S.**
Includes effects of linearity and set point.
Temperature Effect ..... (-20°C to +65°C) ..... ± 1.0%
E Output ..... (-20°C to +40°C) ..... ± 1.0%
Instrument Power
4-20mA 85-135Vac, 50/60Hz,3.0VA
Loop Powered 15-40Vdc
Weight ..... 0.4 Lb.

CONNECTION DIAGRAMS

DIRECT CONNECTIONS

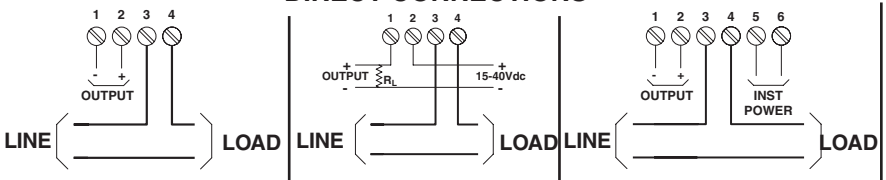

Self-Powered Models, MCT5-***A | Loop-Powered Models, MCT5-***E2 | 4-20mA Output Models, MCT5-***E

USING CURRENT TRANSFORMERS

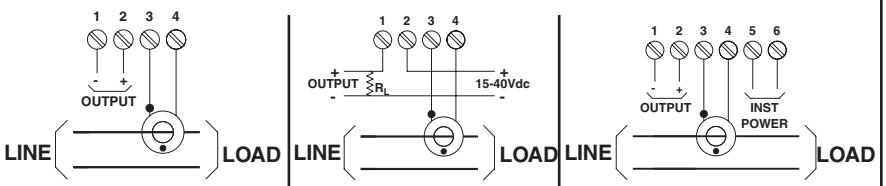

Self-Powered Models, MCT5-***A | Loop-Powered Models, MCT5-***E2 | 4-20mA Output Models, MCT5-***E

CASE DIMENSIONS

UNIT CAN BE MOUNTED ON:
RAIL EN50035 (DIN 1) RAIL EN50022 (DIN 2)

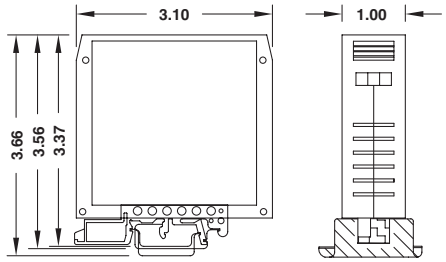

All Dimensions In Inches

OUTPUT SELECTIONS MCT5-***A

Output	Switch Pos. 1	Switch Pos. 2
0-1mA	OFF	OFF
0-5V	ON	ON
0-10V	ON	OFF

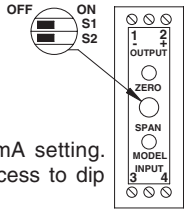

Units are shipped with 0-1mA setting. Remove snap button for access to dip switches.

FLEX-CORE®
Div. Morlan & Associates, Inc.
4970 Scioto Darby Rd. Hilliard, Ohio 43026
WWW.FLEX-CORE.COM
sales@flex-core.com
PHONE (614) 889-6152
TECH. ASSISTANCE (614) 876-8308
FAX # (614) 876-8538

CURRENT TRANSDUCERS

RMS CURRENT TRANSDUCER — *MODEL* MCTR

2-WIRE LOOP POWERED, TRUE RMS

FEATURES

- Accurate True RMS measurement of AC input
- 4-20mAdc 2-wire loop powered
- UL94V-0 Polyamide DIN-mount case
- Slim profile allows maximum use of available space
- Recessed terminals provide increased safety

APPLICATIONS

- Designed for use with current transformers
- Use with any CT with 0.1A, 1A, 5A, or 0.333V output
- True RMS transducer for accurately sensing current in single and 3-phase installations.
- Ideal for non-sinusoidal applications

ORDERING INFORMATION
Example: 0-0.1A Input with
4-20mA Loop Powered Output.
MCTR-0.100E2



INPUT AC CURRENT	STANDARD OUTPUT MODEL MCTR-
	4-20mAdc
0-0.1A	0.100E2
0-1A	001E2
0-5A	005E2
0-0.333V	*0.333E2

*Note: 0.333V model requires isolation through CTs.

Transducer output is derived from the RMS value of the input.
DIN-rail lengths available: Consult Factory

SPECIFICATIONS

INPUT
Current or Voltage ..... See Table
Frequency Range .... Standard 50-60Hz
Burden ..... 0.1A &1A models 0.05VA
5A models 0.18VA
0.333V models 0.004VA
Current Overload
Continuous ..... 1.5 X F.S. Rating
Transient (10s/hr) ..... 5 X F.S. Rating

OUTPUT
Scaling ..... 0-F.S. Input = 4-20mAdc Output
Response ..... (to 90%) 300ms
Loading..(@24Vdc. Loop Pwr) 0-500Ω
Set Point Adjustment ..... ±5% minimum

DIELECTRIC TEST
Input/Output ..... Current input models 2220Vac
NOTE: 0.333V model requires isolation through the current transformer.

INSTRUMENT POWER
Loop-powered ..... Nominal 24Vdc
Range 15-35Vdc

ACCURACY (Includes effects of linearity and setpoint)
50/60Hz ..... 10-100% F.S. ..... ±0.25% F.S.
Output Ripple ..... <1.0% pk-pk

TEMPERATURE
Operating Range ..... -20°C to +60°C
Effect ..... ±1.0% F.S.

PHYSICAL
Termination Wire Size ..... 22 to 12 AWG
Weight ..... 0.4 Lb.
Unit can be mounted on ..... RAIL EN50035 (DIN 1) OR RAIL EN5022 (DIN 2)

CONNECTION DIAGRAMS

DIRECT CURRENT INPUT

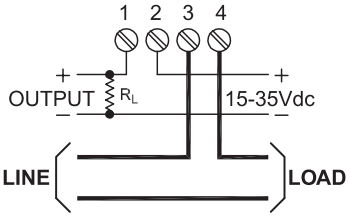

VOLTAGE INPUT

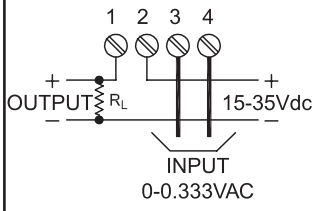

USING EXTERNAL CTS

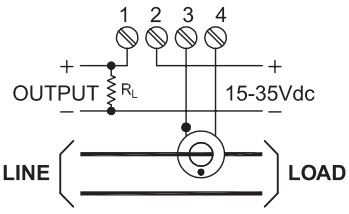

ALL MODELS

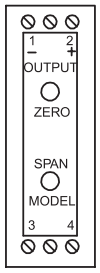

DIMENSIONS

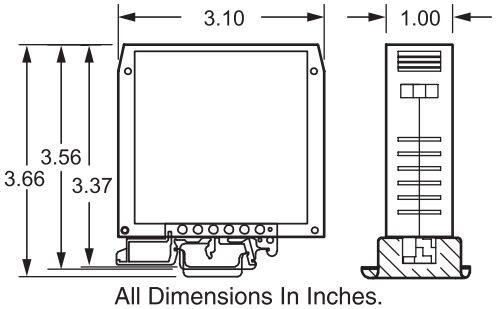

All Dimensions In Inches.

FLEX-CORE®
Div. Morlan & Associates, Inc.
4970 Scioto Darby Rd. Hilliard, Ohio 43026
WWW.FLEX-CORE.COM
sales@flex-core.com
PHONE (614) 889-6152
TECH. ASSISTANCE (614) 876-8308
FAX # (614) 876-8538

CURRENT TRANSDUCERS

AC CURRENT TRANSDUCER — MODEL ACT

ACCURATE TO 0.25% FULL SCALE

FEATURES

- Accurate, reliable current measurement over a frequency range of 50/60Hz
- UL, CUL, and CE listed

INPUT AC AMPS	STANDARD OUTPUTS MODEL ACT-				
	UL, CUL, & CE				UL & CUL
	0-1mAdc*	4-20mAdc**	0-10Vdc*	0-5Vdc*	4-20mAdc
0-1	001A	001E2	001C	001CX5	001E
0-5	005A	005E2	005C	005CX5	005E
0-10	010A	010E2	010C	010CX5	010E
0-20	020A	020E2	020C	020CX5	020E

Highlighted Model (5A) can be used with current transformers.
*Models are self-powered from measured line.
**4-20mA loop-powered, E2 models require 15-24Vdc.
4-20mA, E models require 115Vac instrument power.
Optional 230Vac instrument power-Add suffix "**-22**".
Transducer output is derived from the average absolute value of the input and calibrated in terms of the RMS value of the sine wave input.
"E" Model not CE approved

APPLICATIONS

- Designed for use in applications which require inexpensive current measurement.
- Designed to withstand motor start-up transients.

c UL us LISTED E500652

CE



ORDERING INFORMATION

Example: 20Aac input with 4-20mA output.
ACT-020E

SPECIFICATIONS

INPUT

Frequency Range 50/60Hz
Burden ..... 1.0VA F.S.
Current Overload ..... 2 X F.S. Rating continuous
20A model ..... 1.25 X F.S. Rating continuous
Dielectric Test.....(Input/Output/Case) 2200Vac
Instrument Power
STD. 4-20mA UNITS ..... 115Vac, 50/60Hz, ± 15%, 10VA max.
"**-22**" Option ..... 230Vac, 50/60Hz, ± 15%, 10VA max.
Weight ..... A, C, CX5, and E2 Models ..... 0.8 Lb.
E Models ..... 1.4 Lbs.

OUTPUT

ACCURACY ..... ± 0.25% F.S. @ 60Hz
Includes effects of linearity and set point.
Output Ripple ..... < 1.0% F.S.
Response 400ms
Output Loading (Ω)
1mA 0-10K
4-20mA (E Models) 0-1K
4-20mA (E2 Models) ..... 0-600Ω @ 24Vdc
5V & 10V ..... ≥ 10M
Field Adjustable Cal. ..... ± 5%
Temperature Range ..... -20°C to +60°C
Temperature Effect ..... ± 1.0% Rdg.

DIMENSIONS

MODELS WITH A, C, CX5 & E2 OPTIONS

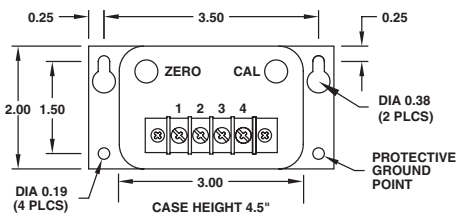

MODEL ACT WITH E OPTION

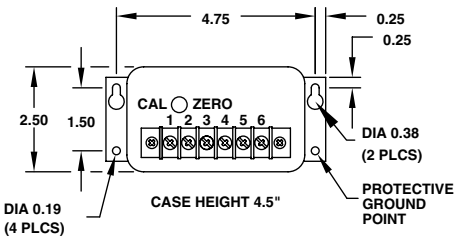

All Dimensions In Inches

CONNECTION DIAGRAMS

A, C, CX5 OPTIONS

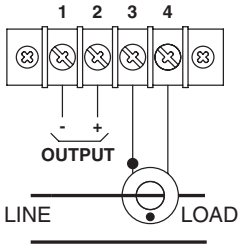

Model ACT with Current Transformers

E OPTION

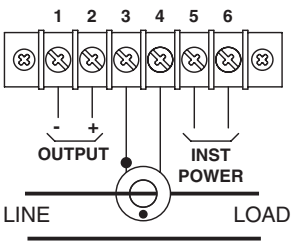

Model ACT with Current Transformers

E2 OPTION

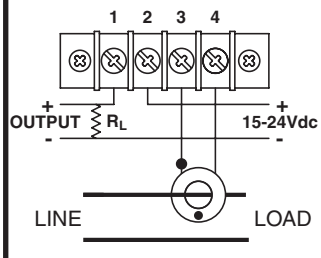

Model ACT with Current Transformers

A, C, CX5 OPTIONS

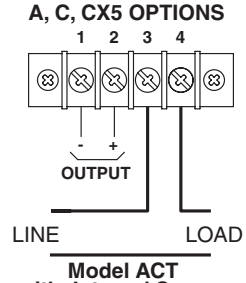

Model ACT with Integral Sensor

E OPTION

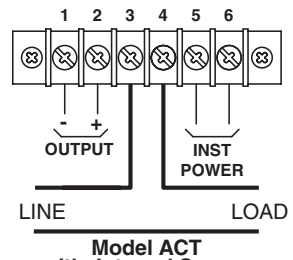

Model ACT with Integral Sensor

E2 OPTION

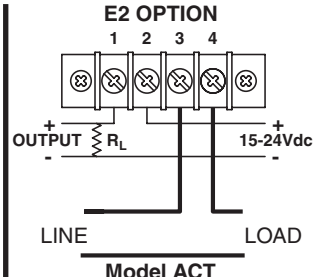

Model ACT with Integral Sensor

FLEX-CORE®
Div. Morlan & Associates, Inc.
4970 Scioto Darby Rd. Hilliard, Ohio 43026
WWW.FLEX-CORE.COM
sales@flex-core.com
PHONE (614) 889-6152
TECH. ASSISTANCE (614) 876-8308
FAX # (614) 876-8538

CURRENT TRANSDUCERS

AC CURRENT TRANSDUCER — MODEL 3ACT

THREE CURRENT TRANSDUCERS IN ONE ENCLOSURE

FEATURES

- Accurate, reliable current measurement.
- Three separate inputs, three outputs.
- Input/output isolation.
- UL, CUL, and CE Listed.

INPUT	STANDARD OUTPUTS MODEL 3ACT-				
	UL, CUL, & CE				UL & CUL
AC AMPS	0-1mAdc*	4-20mA**	0-10Vdc*	0-5Vdc*	4-20mA
0-1	001A	001E2	001C	001CX5	001E
0-5	005A	005E2	005C	005CX5	005E
0-10	010A	010E2	010C	010CX5	010E
0-20	020A	020E2	020C	020CX5	020E

Highlighted 0-5Amp Model can be used with current transformers.
*Models are self-powered from measured line.
**4-20mA loop-powered, E2 models require 15-24Vdc.
4-20mA, E models require 115Vac instrument power.
Optional 230Vac instrument power - Add suffix "-22".
Transducer output is derived from the average absolute value of the input and calibrated in terms of the RMS value of the sine wave input.
"E" Model not CE Listed
For an output that represents the average of the three inputs:
Add Suffix "Y05 (Formerly X6668) (Note: Not UL, CUL, or CE Listed)

APPLICATIONS

- Designed for use in applications which require inexpensive current measurement.
- Designed to withstand motor start-up transients.

c UL us LISTED E167120 CE



ORDERING INFORMATION

Example: Three 0-5A Inputs with Three 4-20mA Outputs.
3ACT-005E

SPECIFICATIONS

INPUT

Frequency Range 50/60Hz
Burden ..... 1.0VA F.S. (each input)
Current Overload ..... 2 X F.S. Rating continuous
20A Model ..... 1.25 X F.S. Rating
Dielectric Test.... (Input/Output/Case) 2200Vac
Instrument Power
STD. 4-20mA Units ..... 115Vac, 50/60Hz, ± 15%, 10VA
"-22" Option ..... 230Vac, 50/60Hz, ± 15%, 10VA

OUTPUT

ACCURACY ..... ± 0.25% F.S. (@ 60Hz)
Includes effects of linearity and setpoint.
Output Ripple ..... <1.0% F.S.
Response 400ms
Output Loading (Ω)
1mA 0-10K
4-20mA (E Model) 0-1K
4-20mA (E2 Model) ..... 0-600Ω @ 24Vdc
5V & 10V ..... ≥ 10M
Field Adjustable Cal ..... ± 5%
Temperature Effect ..... ± 1.0% Rdg.
Temperature Range ..... -20°C to +60°C

DIMENSIONS

Model 3ACT with A, C, CX5, and E2 Options

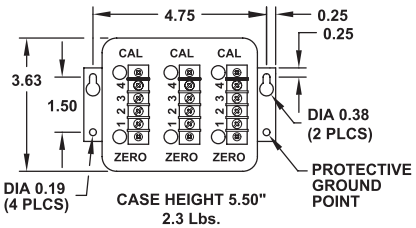

Model 3ACT with E Option

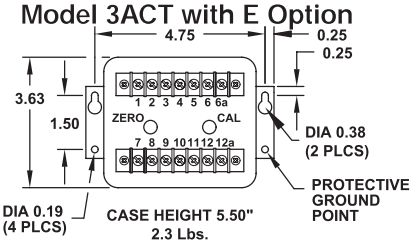

All Dimensions In Inches

CONNECTION DIAGRAMS

3ACT with Integral Current Sensor A, C& CX5 Options

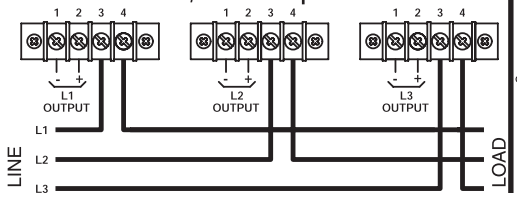

3ACT with Integral Current Sensor E2 Option

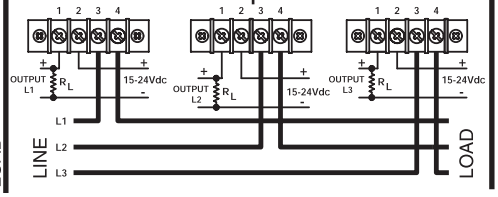

3ACT with Integral Current Sensor E Option

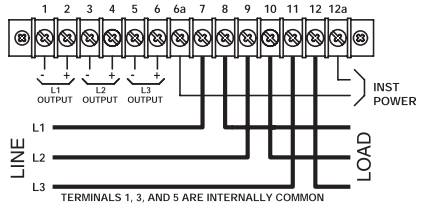

3ACT Using Current Transformers A, C & CX5 Options

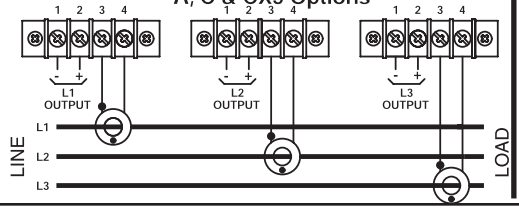

3ACT Using Current Transformers E2 Option

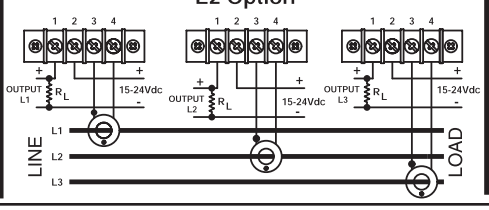

3ACT Using Current Transformers E Option

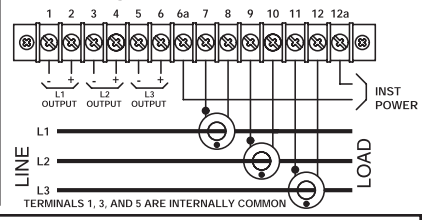

FLEX-CORE®
Div. Morlan & Associates, Inc.
4970 Scioto Darby Rd. Hilliard, Ohio 43026
WWW.FLEX-CORE.COM
sales@flex-core.com
PHONE (614) 889-6152
TECH. ASSISTANCE (614) 876-8308
FAX # (614) 876-8538

RMS CURRENT TRANSDUCER — MODEL ACTR

ACCURATE TO 0.25% FULL SCALE

FEATURES

- Accurate measurement of the **true RMS** value of input signals over a wide frequency range.
- Input/output isolation.

INPUT	STANDARD OUTPUTS MODEL ACTR-			
AC AMPS	0-1mAdc	4-20mAdc	0-10Vdc	0-5Vdc
0 to 1.0	001B	001E	001D	001X5
0 to 5.0	005B	005E	005D	005X5
0 to 10.0	010B	010E	010D	010X5
0 to 15.0	015B	015E	015D	015X5
0 to 20.0	020B	020E	020D	020X5

Highlighted model (5A) can be used with current transformers.

All std. units require 115Vac, ±15% instrument power, (50-60Hz).

Optional 230Vac instrument power-Add suffix "**-22**".

APPLICATIONS

- For use in applications where measurement of non-sinusoidal waveforms is required.
- Designed to withstand motor start-up transients.

c UL us LISTED E500652



ORDERING INFORMATION
Example: 15Aac Input with 0-10Vdc Output.
ACTR-015D

SPECIFICATIONS

INPUT
Current ..... See Table
Frequency Range ..... 48 to 420Hz
Burden ..... 0.28VA F.S.
Current Overload
1-10A Range ..... 2 X F.S. (cont.)
15-20A Range ..... 25A Maximum,continuous
10 X Rating..... (1 sec. transient) ..... 10 Seconds/hour
Dielectric Test ..... (Input/Output/Case) 2200Vac

OUTPUT
Output Ripple..... <1.0% F.S.
Response...(90%).....100ms
Output Loading (Ω)
0-1mA.....0-10K
0-10Vdc, 0-5Vdc.....2K min.
4-20mA..... 0-500
Field Adjustable Cal..... ± 10%

ACCURACY ..... ± 0.25% F.S. @ 60Hz
Includes effects of linearity and setpoint.
± 0.5% over frequency range (typ.)

Temperature Effect ..... (-20°C to +60°C) ..... ± 1.0% Rdg.
Instrument Power..(Std.)..... 115Vac, ±15%, 50-60Hz, 3.5VA
Weight ..... 1.5 Lbs.

CONNECTION DIAGRAMS

Using Current Transformers

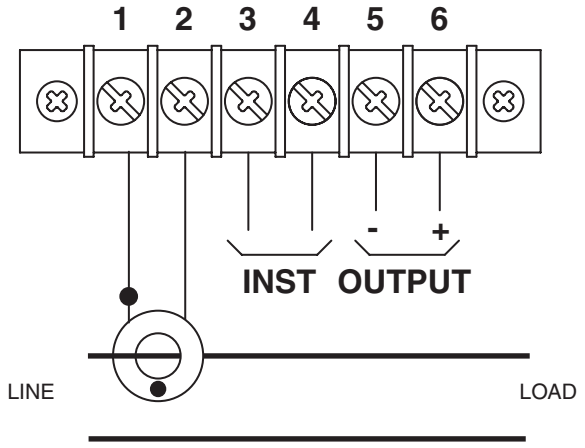

Direct Connection

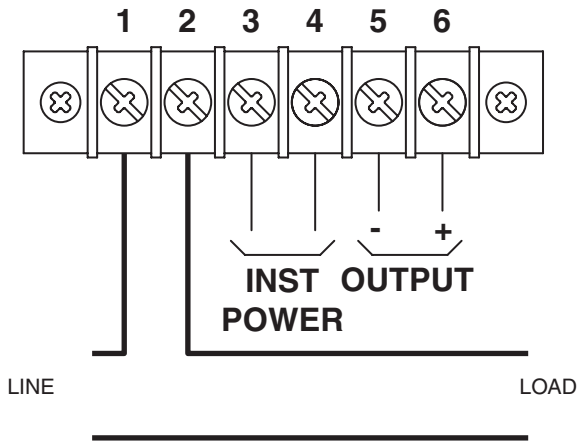

DIMENSIONS

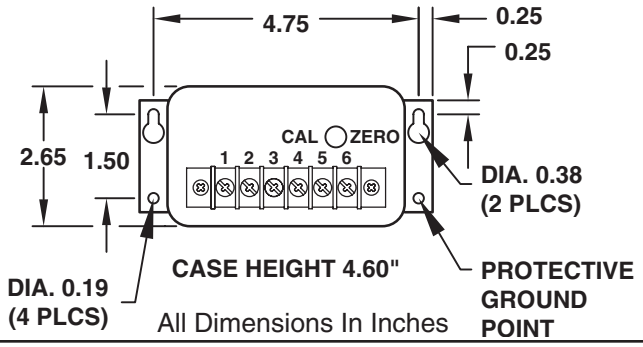

All Dimensions In Inches

FLEX-CORE®
Div. Morlan & Associates, Inc.
4970 Scioto Darby Rd. Hilliard, Ohio 43026
WWW.FLEX-CORE.COM
sales@flex-core.com
PHONE (614) 889-6152
TECH. ASSISTANCE (614) 876-8308
FAX # (614) 876-8538

CURRENT TRANSDUCERS

3 IN 1 RMS CURRENT TRANSDUCER — *MODEL* 3CTR

THREE RMS CURRENT TRANSDUCERS IN ONE ENCLOSURE

FEATURES

- Accurate measurement of the **true RMS** value of input signals over a wide frequency range.
- Accurate to 0.25% Full Scale
- Designed to withstand motor start-up transients.
- Input/output isolation.

INPUT	STANDARD OUTPUTS MODEL 3CTR-			
AC AMPS	0-1mAdc	4-20mAdc	0-10Vdc	0-5Vdc
0 to 1.0A	001B	001E	001D	001X5
0 to 5.0A	005B	005E	005D	005X5
0 to 10.0A	010B	010E	010D	010X5
0 to 15.0A	015B	015E	015D	015X5
0 to 20.0A	020B	020E	020D	020X5

ORDERING INFORMATION
Example: 5Aac Input
with 0-10Vdc Output.
3CTR-005D

APPLICATIONS

- Designed for use in applications where measurement of non-sinusoidal waveforms is required.
- Designed for use on three-phase systems, but may also be used to monitor three single phase circuits where panel space is limited.
- Use with current transformers for high current applications.



SPECIFICATIONS

INPUT

Current ..... See Table
Frequency Range ..... 48 to 420Hz
Burden ..... 0.4VA F.S.
Current Overload
1-10A Range ..... 2 X F.S.(cont.)
15-20A Range ..... 1.25 X F.S.(cont.)
1A Range ..... 10A (10 sec. transient)
All other Ranges ..... 50A (10 sec. transient)
250A (1 sec. transient)
Dielectric Test.....(Input/Output/Case) 2200Vac

OUTPUT

Output Ripple ..... <1.0% F.S.
Response (90%) 100ms
Output Loading (Ω)
0-1mA 0-10K
0-10Vdc, 0-5Vdc ..... 2K min.
4-20mA 0-500
Field Adjustable Cal. ..... ±10%
ACCURACY ..... ±0.25% F.S. at 60Hz
Includes effects of linearity and repeatability.
±0.5% F.S. over frequency range
Temperature Effect.....(-20°C to +60°C) ..... ±1.0% Rdg.
Instrument Power (Std.).....85-265Vac, 48-420Hz, 5VA
or 110-370Vdc, 5VA
Weight ..... 2.5 Lbs.

CONNECTION DIAGRAMS

USING INTERNAL CURRENT SENSORS

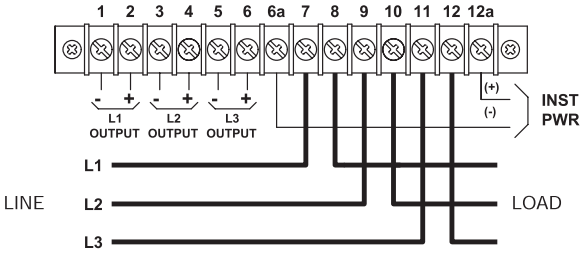

USING CURRENT TRANSFORMERS

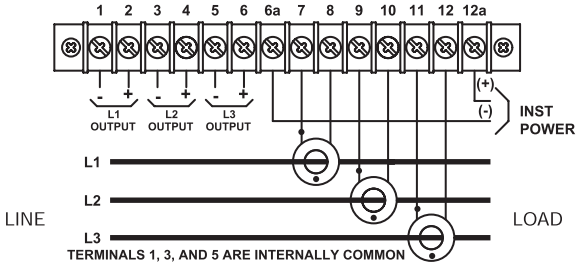

DIMENSIONS

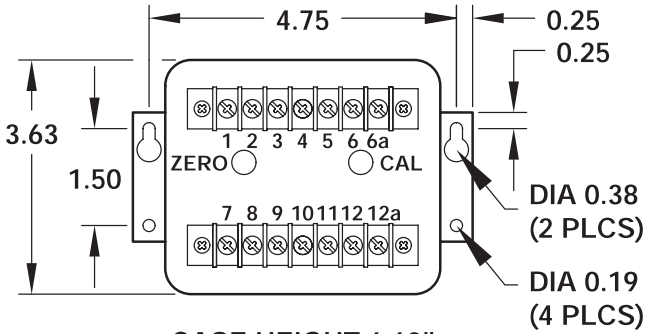

CASE HEIGHT 6.63"

All Dimensions In Inches

FLEX-CORE®
Div. Morlan & Associates, Inc.
4970 Scioto Darby Rd. Hilliard, Ohio 43026
WWW.FLEX-CORE.COM
sales@flex-core.com
PHONE (614) 889-6152
TECH. ASSISTANCE (614) 876-8308
FAX # (614) 876-8538

TRUE RMS CURRENT TRANSDUCER *MODEL* MGT-0420-001

APPLICATIONS

- The MGT-0420-001 current transducer converts a 0-0.333Vac signal to a standard 4-20mAdc output.
- the MGT-0420-001 helps to reduce inventory by allowing the measurement of various signals by simply changing the input device.

LOW COST

c UL us
E357772

CE

RoHS COMPLIANT

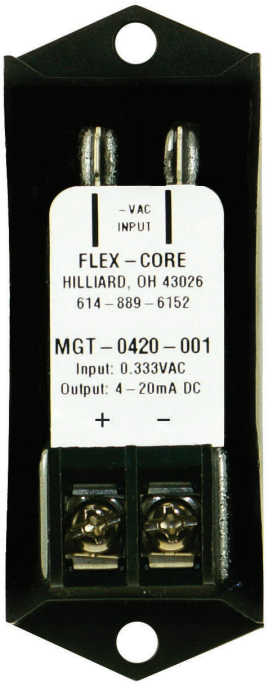

FEATURES

- Highly accurate, true RMS measurement ideal for distorted waveforms.
- Self powered from the 4-20mA loop.
- Robust construction, compact size and easy wiring

SPECIFICATIONS

Power	Standard 4-20mA loop voltage 8-35Vdc
Input	0.333Vac full scale AC voltage via input spade connectors
Output	4-20mA loop (sinking) max. impedance 750Ω @24Vdc (barrier strip terminal provided)
Accuracy	True RMS, 0.3% F.S.
Frequency	40 to 3000Hz
Enclosure	Potted plastic box. Back mounting bracket
Weight	1.5 oz.

DIMENSIONS

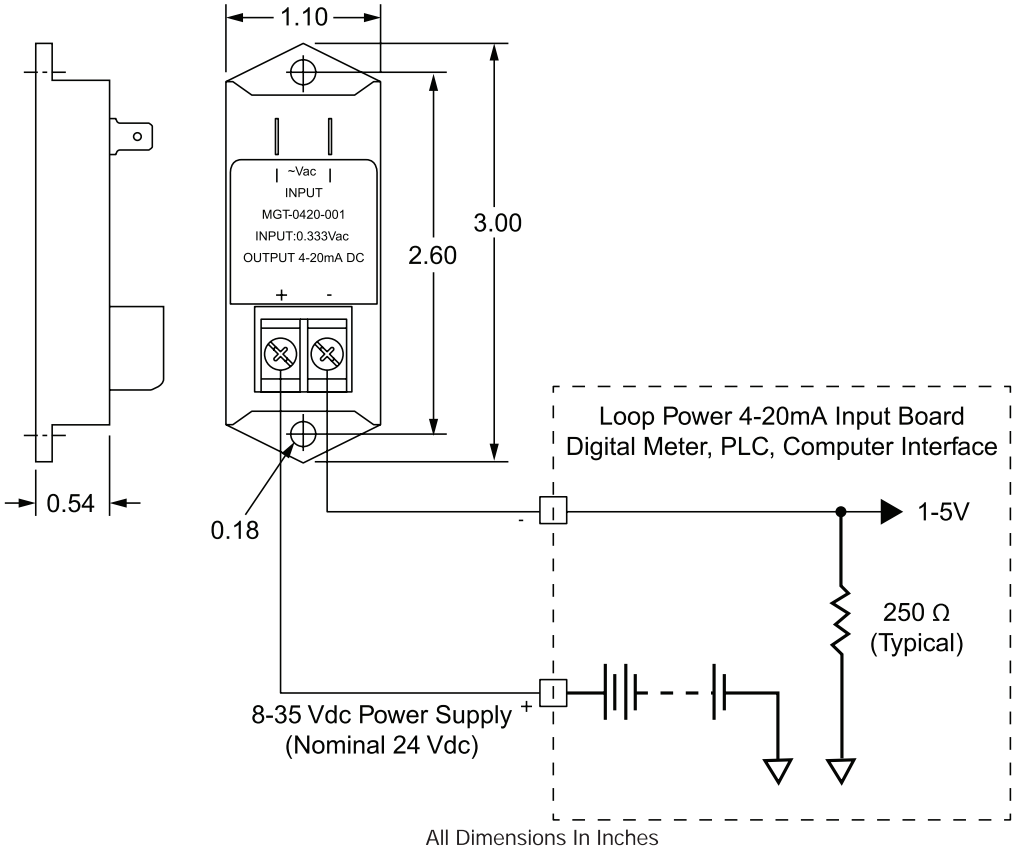

All Dimensions In Inches

FLEX-CORE®
Div. Morlan & Associates, Inc.
4970 Scioto Darby Rd. Hilliard, Ohio 43026

WWW.FLEX-CORE.COM
sales@flex-core.com

PHONE (614) 889-6152
TECH. ASSISTANCE (614) 876-8308
FAX # (614) 876-8538

CURRENT TRANSDUCERS

DC CURRENT TRANSDUCER — *MODEL* DT

DESCRIPTION

DT Series Current Transducers combine a Hall effect sensor and signal conditioner into a single package for use in DC current applications up to 200A. The DT unipolar models have jumper selectable current input ranges and industry standard 4-20mA, 0-5Vdc or 0-10Vdc outputs. Available in split core or solid core enclosures.
DT Bidirectional Output models produce a + 10Vdc signal with current through the aperture in one direction and -10Vdc with current passing in the reverse direction.
Split core enclosures only.

c UL us E310017

CE RoHS COMPLIANT



APPLICATIONS

- Solar combiner boxes
- Battery Banks
- Transportation
- Electric heating elements

SPECIFICATIONS

Output Signal..... 4-20mA, 0-5Vdc, 0-10Vdc
±10Vdc (Bidirectional models only)
Output Limit 4-20mA: 23mA
0-5Vdc: 5.75Vdc
0-10Vdc:11.5Vdc
Accuracy..... Solid-core 1% F.S.
Split-core 2% F.S.
Repeatability..... 1.0% F.S.
Response Time.....Solid Core: 20ms (to 90% of step change)
Split Core: 100ms (to 90% of step change)
Frequency Range ..... DC
Power Supply.....24Vac/dc, 2VA max.
Power Consumption 2VA
Loading..... 4-20mA: 500max.
0-5Vdc: 25KΩ min.
0-10Vdc: 50KΩ min.
Isolation Voltage ..... 3kV (monitored line to output)
Linearity..... 0.75% F.S.
Current Ranges .....Field Selectable Ranges from 0-200A
Factory Set Ranges from 0-200A (Bidirectional models only)
Sensing Aperture.....FL Case: 0.75″ (19.1mm) dia.
SP Case: 0.85″ (21.6mm) sq.
Case .....UL94 V0 Flammability Rated
Environmental.....-4°F to +122°F (-20°C to +50°C),
0-95% RH, non-condensing
Weight .....5.5 oz.

ORDERING INFORMATION
DT SERIES UNIPOLAR OUTPUT MODELS

Example: DT2-420-24U-U-SP
Split Core DC current transducer, 0-100/150/200A range, 24Vac/DC powered, 4-20mA unipolar output.

(1) (2) (3) (4) (5)
DT □-□□□-□□□-□□-□□

(1) Full Scale Range	
0	5, 10, 20A*
1	50, 75, 100A
2	100, 150, 200A

(2) Output Signal	
420	4-20mA
005	0-5Vdc
010	10Vdc

(3) Power Supply	
24U	+24Vac/DC

(4) Output Polarity	
U	Unipolar

(5) Case Style	
FL	Solid core
SP	Split core

*DT0 models FL case only.

ORDERING INFORMATION
DT SERIES BIDIRECTIONAL OUTPUT MODELS

Example: DT2-010-24U-BD-SP
Split core DC current transducer, 0-200A range, 24Vac/DC powered, ±10Vdc bidirectional output

(1) (2) (3) (4) (5)
DT □-□□□-□□□-□□-□□

(1) Full Scale Range	
1	100A
2	200A

(2) Output Signal	
010	±10Vdc

(3) Power Supply	
24U	+24Vac/DC

(4) Output Polarity	
BD	Bidirectional

(5) Case Style	
SP	Split core

DIMENSIONS

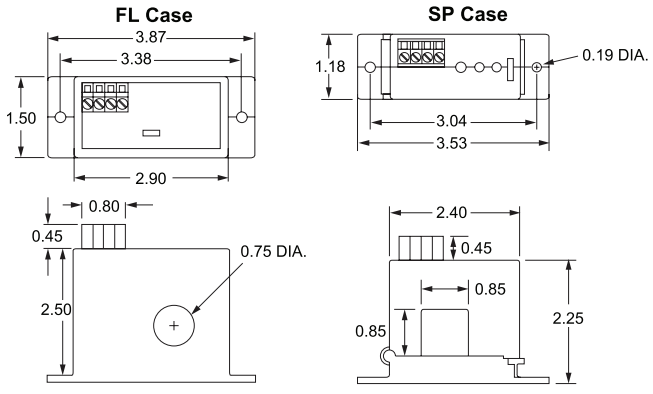

All Dimensions In Inches

CONNECTIONS

DT Series Unipolar Output Models

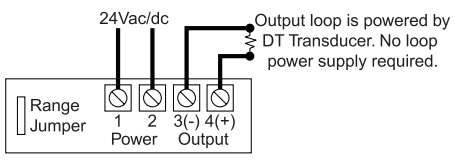

DT Series Bi Directional Output Models

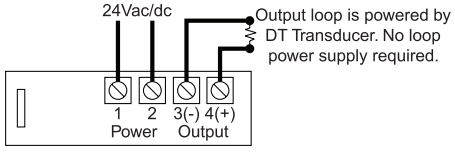

CURRENT TRANSDUCERS

FLEX-CORE®
Div. Morlan & Associates, Inc.
4970 Scioto Darby Rd. Hilliard, Ohio 43026
WWW.FLEX-CORE.COM
sales@flex-core.com
PHONE (614) 889-6152
TECH. ASSISTANCE (614) 876-8308
FAX # (614) 876-8538

CURRENT TRANSDUCERS

DC & RMS CURRENT TRANSDUCERS — MODELS CT7, CT8

DC TO 500Hz **0.1 TO 20A INPUTS**

FEATURES

- Input/output isolation of 2500V.
- The CT7 provides an output which is directly proportional to the input signal from DC to 500Hz. The output is proportional to the input.
  (AC input/AC output, DC input/DC output)
  Note: This does not apply to 4-20mA output models. These models should only be used on DC signals.
- The CT8 provides an output which is directly proportional to the RMS value of AC and/or DC input signal.

INPUT AMPS	STANDARD OUTPUTS MODEL CT7- & CT8-			
	1mA*	4-20mA	10V*	5V*
0 to 0.1	002B	002E	002D	002X5
0 to 0.5	004B	004E	004D	004X5
0 to 1.0	006B	006E	006D	006X5
0 to 1.5	007B	007E	007D	007X5
0 to 2.0	008B	008E	008D	008X5
0 to 5.0	014B	014E	014D	014X5
0 to 10.0	015B	015E	015D	015X5
0 to 15.0	016B	016E	016D	016X5
0 to 20.0	017B	017E	017D	017X5

*Bi-directional (+/-) output on CT7

APPLICATIONS

- Accurate measurement of current waveforms containing DC and non-sinusoidal AC components.
- Low current measurement.



ORDERING INFORMATION
Example: 0-5Adc Input
with 4-20mA Output.
CT7-014E

SPECIFICATIONS

INPUT

Current ..... See Table
Frequency Range dc-500Hz
Burden ..... VA (0.050V X F.S. Current)
Overload ..... 1.25 X F.S. Rating
Dielectric Test ..... (Input/Output/Case) 2500Vac
Instrument Power
85-265Vac, 48-420Hz, 5VA, or 110-370Vdc
Temperature Effects...(-10°C to +60°C) ..... + 1.0% Rdg.
Field Adjustable Cal. ..... ± 10%

Instrument Power Options
Option -12, -15, -24, -37, -48
for 12Vdc thru 48Vdc, ± 10%, 150mA Max.

OUTPUT

ACCURACY.....Includes effects of linearity and repeatability.
CT7 Models..... **± 0.25% F.S. @ DC**
CT8 Models..... **± 0.25% F.S. @ 48-420Hz**
Response Time..... (to 90%)
CT7 Models..... 1ms
CT8 Models..... 100 ms
Ripple ..... <1.0% F.S.
Output Loading (Ω)
0-1mA 0-10K
5V & 10V ..... >2K
20mA 0-500
Weight ..... 1.5 Lbs.

CASE DIMENSIONS

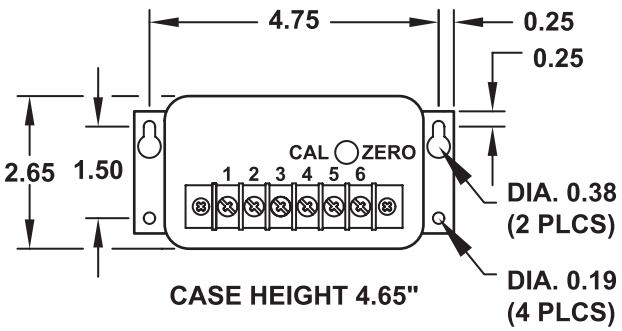

All Dimensions In Inches

CONNECTION DIAGRAMS

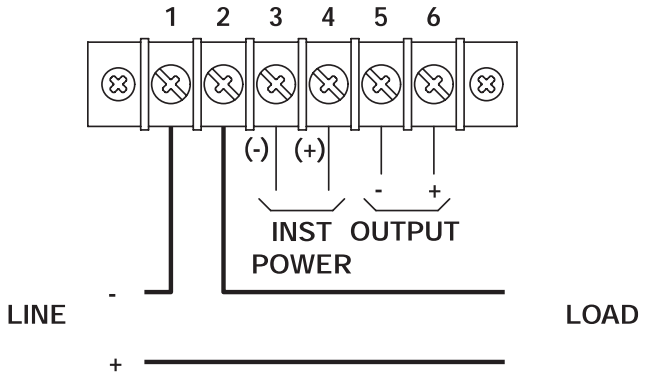

FLEX-CORE®
Div. Morlan & Associates, Inc.
4970 Scioto Darby Rd. Hilliard, Ohio 43026
WWW.FLEX-CORE.COM
sales@flex-core.com
PHONE (614) 889-6152
TECH. ASSISTANCE (614) 876-8308
FAX # (614) 876-8538

HALL EFFECT DC CURRENT TRANSDUCER *MODEL* CT-4809

CURRENT SENSOR WITH 4-20MA LOOP-POWERED OUTPUT AMPLIFIER

DESCRIPTION

The model CT-4809 is a Hall-effect current sensor with signal conditioning in a single compact package. Hall-effect current measurement is a non-contact technique that measures the magnetizing effects of current flowing in a conductor. Advantages of this technique include high electrical isolation between the measured conductor and transducer output, high over range capability and fast response to input changes. The loop-powered design simplifies installation by reducing instrument power and output signal connections to a simple 2-wire interface.

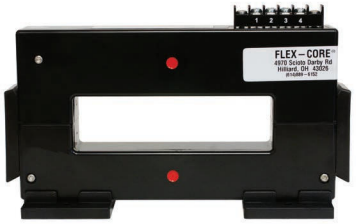

RoHS COMPLIANT

Made in U.S.A.

FEATURES

- Sensor and amplifier in one package
- Split core configuration
- Replaces shunts. No insertion loss.

SPECIFICATIONS

INPUT

Current..... CT-4809..... 0-400Adc
Over Current..... 10 X Rating
Frequency Range ..... dc

OUTPUT

Type ..... 2-wire ..... 4-20mAdc, loop powered
Scaling..... 0-Full Scale input = 4-20mA output
Loading..... 500Ω
Response Time..... <1ms
Secondary Terminal Screw Size ..... #6-32
Recommended Torque ..... 8 in lbs.

DIELECTRIC TEST

Bare conductor through window to output 5800Vac

INSTRUMENT POWER

Loop Powered..... 20-30Vdc

ENCLOSURE ..... Noryl SE1X, Black

ACCURACY AND LINEARITY

Standard ..... ±0.5% F.S.

TEMPERATURE

Operating Range ..... -40°C to +60°C
Effect ..... ±0.025%/°C

DIMENSIONS AND CONNECTIONS

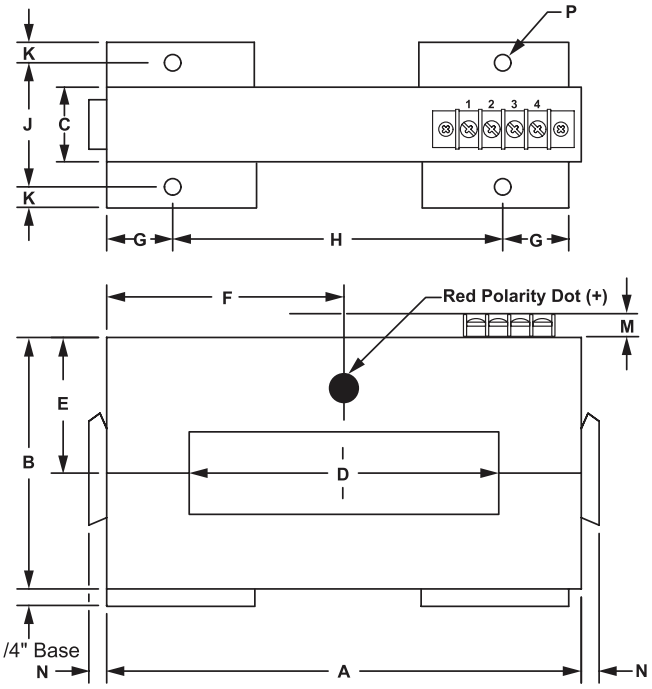

All Dimensions In Inches

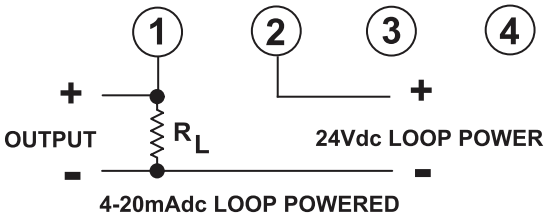

SENSOR SIZE	SENSOR DIMENSIONS													WT. LBS.
	A	B	C	D	E	F	G	H	J	K	M	N	P	
Z	7 3/16	3 15/16	1 5/16	1 1/4 X 4 1/2	2 9/64	3 1/2	1	5	1 7/8	5/16	3/8	5/16	3/16	2.8

FLEX-CORE®
Div. Morlan & Associates, Inc.
4970 Scioto Darby Rd. Hilliard, Ohio 43026
WWW.FLEX-CORE.COM
sales@flex-core.com
PHONE (614) 889-6152
TECH. ASSISTANCE (614) 876-8308
FAX # (614) 876-8538

HALL EFFECT DC CURRENT TRANSDUCER *MODEL* CT-4812

Current Sensor with 4-20mA Output

DESCRIPTION

The model CT-4812 is a Hall-effect current sensor with signal conditioning in a single compact package. Hall-effect current measurement is a non-contact technique that measures the magnetizing effects of current flowing in a conductor. Advantages of this technique include high electrical isolation between the measured conductor and transducer output, high over-range capability and fast response to input changes.

RoHS COMPLIANT

Made in U.S.A.



FEATURES

- Sensor and Amplifier in one package
- Output is proportional in direction and magnitude to the current flow through the window. (ac input yields ac output, dc input yields dc output)
- Replaces shunts. No insertion loss.

SPECIFICATIONS

INPUT

Current ..... Adc or peak ac (see table)
Over-Current without damage..... 10 X Rating

OUTPUT

Scaling.....0-F.S. Input = 4-20mAdc Output
Load 0-500Ω
Response Time (to 90%)..... 500µs, typical

INSTRUMENT POWER

Standard..... 24Vdc or ac ±10%
Instrument Current ..... 25mA + load current

DIELECTRIC TEST

Bare Conductor Through Window to Output.... 3750Vac

ENVIRONMENTAL

Operating Temperature Range .....-40°C to +60°C
Temperature Effect .....±0.025%/°C
Humidity ..... 0-95%, non-condensing

ACCURACY AND LINEARITY .....±0.5% F.S.

WEIGHT ..... 0.6 Lb.

MODEL SELECTION

INPUT (Adc)	CATALOG NUMBER
0-400	CT-4812
0-300	CT-4812-3
0-200	CT-4812-2
0-100	CT-4812-1

CONNECTIONS

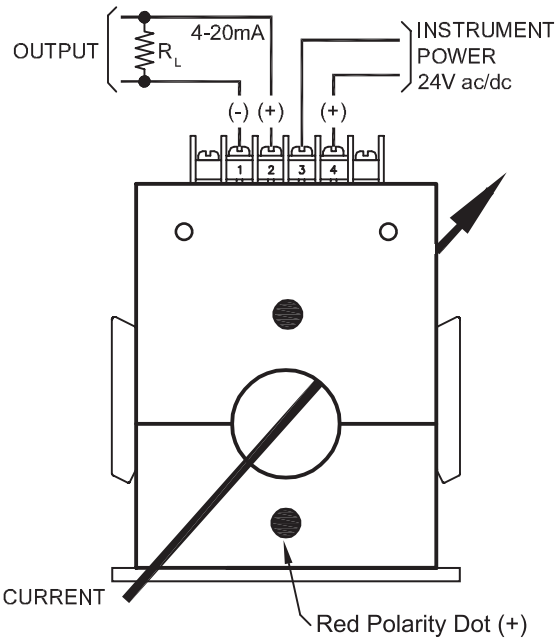

FLEX-CORE®
Div. Morlan & Associates, Inc.
4970 Scioto Darby Rd. Hilliard, Ohio 43026
WWW.FLEX-CORE.COM
sales@flex-core.com
PHONE (614) 889-6152
TECH. ASSISTANCE (614) 876-8308
FAX # (614) 876-8538

DIMENSIONS — *MODEL* CT-4812

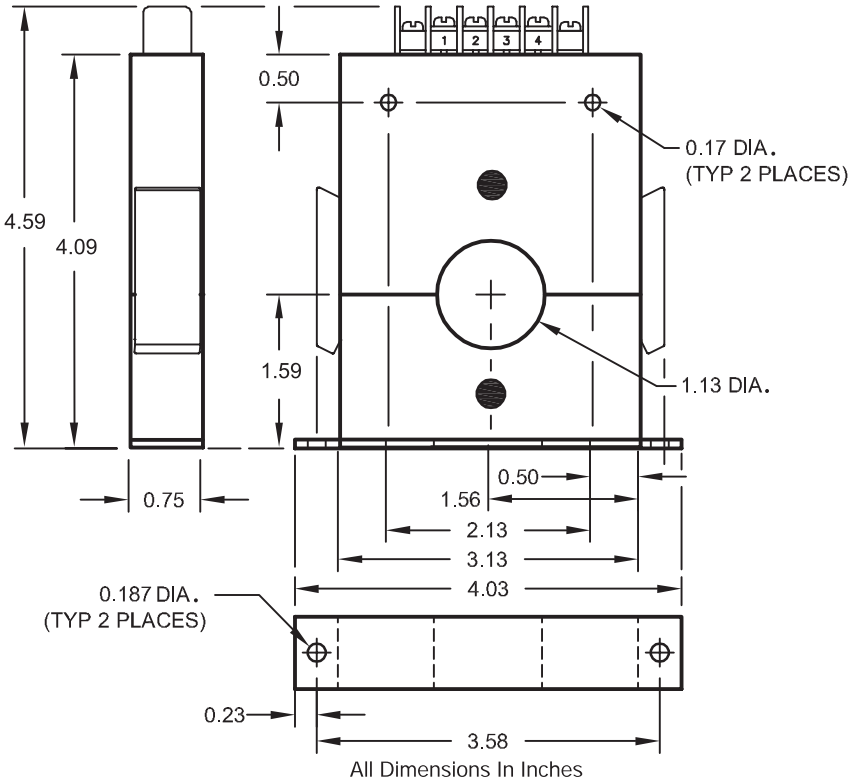

MOUNTING INSTRUCTIONS

Unit must be installed in a vertical position as shown.

The conductors through the window and the wires attached to the terminal strips must not apply any stress to the latches in any direction.

FLEX-CORE®
Div. Morlan & Associates, Inc.
4970 Scioto Darby Rd. Hilliard, Ohio 43026
WWW.FLEX-CORE.COM
sales@flex-core.com
PHONE (614) 889-6152
TECH. ASSISTANCE (614) 876-8308
FAX # (614) 876-8538

HALL EFFECT CURRENT TRANSDUCER — MODEL CT-4820

Current Sensor with 4-20mA Output

DESCRIPTION

The model CT-4820 is a Hall-effect current sensor with signal conditioning in a single compact package. Hall-effect current measurement is a non-contact technique that measures the magnetizing effects of current flowing in a conductor. Advantages of this technique include high electrical isolation between the measured conductor and transducer output, high over-range capability and fast response to input changes.

RoHS COMPLIANT

Made in U.S.A.

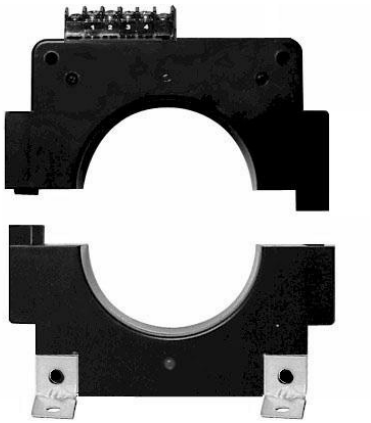

FEATURES

- Sensor and Amplifier in one package
- Output is proportional in direction and magnitude to the current flow through the window. (ac input yields ac output, dc input yields dc output)
- Split core configuration available
- Replaces shunts, no insertion loss

SPECIFICATIONS

INPUT

Current ..... 0-400Adc or peak ac
Over-Current without damage..... 10 X Rating

OUTPUT

Scaling ..... 0-400Adc Input = 4-20mAdc Output
Load 0-500Ω
Response Time (to 90%)..... 500µs, typical

INSTRUMENT POWER

Standard..... 24Vdc or ac ±10%
Instrument Current ..... 25mA + load current

DIELECTRIC TEST

Bare Conductor Through Window to Output ... 3750Vac

ENVIRONMENTAL

Operating Temperature Range..... -40ºC to +60ºC
Temperature Effect..... ±0.025%/ºC
Humidity ..... 0-95%, non-condensing

ACCURACY AND LINEARITY ..... ±0.5% F.S.

WEIGHT ..... 2.8 Lbs.

DIMENSIONS AND CONNECTIONS

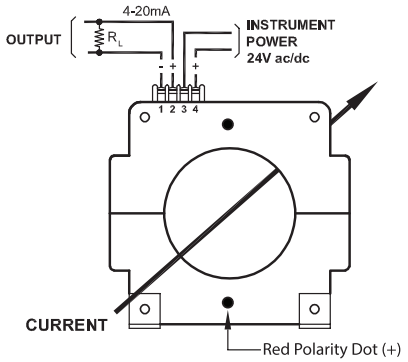

NOTES:
1. ALL DIMENSIONS IN INCHES
2. TOL: +0.03 UNLESS OTHERWISE STATED

HOLE INFORMATION
A. 0.28 DIA (TYP 4 PLCS)
B. 0.221 DIA (TYP 4 PLCS)

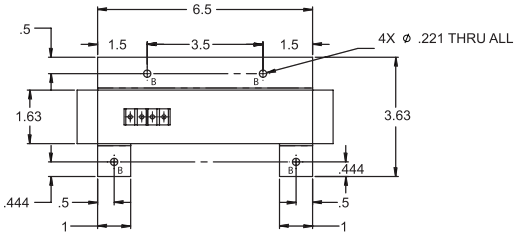

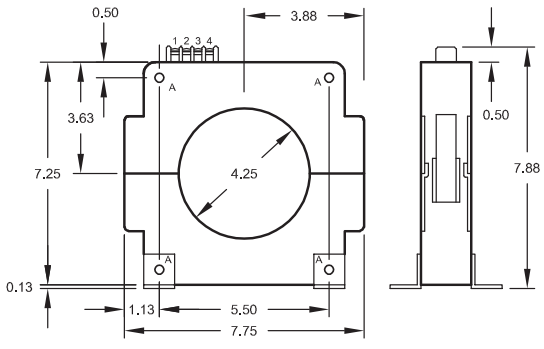

FLEX-CORE®
Div. Morlan & Associates, Inc.
4970 Scioto Darby Rd. Hilliard, Ohio 43026
WWW.FLEX-CORE.COM
sales@flex-core.com
PHONE (614) 889-6152
TECH. ASSISTANCE (614) 876-8308
FAX # (614) 876-8538

CURRENT TRANSDUCERS

DC CURRENT TRANSDUCER — MODEL CTG

FEATURES / APPLICATIONS

- Non-Contact DC Measurement
- Split Core Option
- Input/Output isolation
- Current Ranges 100A - 5000A DC
- Low DC Power Requirements

c UL us LISTED
E500652


Rectangular Window Model


Circular Window Model

SPECIFICATIONS

INPUT

Current.....See Table..... DC/Peak AC
Over Current Without Damage.....10 X Rating @60Hz
Instrument Power.....Operating Range ..... ±13Vdc to ±18Vdc
Instrument Current..... <±20mAdc
Dielectric Test ..... (conductor through window/output).....2200Vac
Sensor size "D" and "E" (split core) 1000Vdc
Frequency Response..... dc - 400Hz

OUTPUT

Signal..... ± 5V or ± 10V
Bi-directional ..... Yes
Load on Output ..... > 25K Ω
Response.....Typ. 500µs
Saturation.....Approx. ..... 13.5V @ ±15Vdc inst. pwr.

ACCURACY & LINEARITY..... ±1.0% F.S.
Temp. Effects ..... (0°C to +40°C)..... ±0.05%/°C
Note: The output is proportional in direction and magnitude from the input current

AVAILABLE OPTIONS

Power Supply ..... ± 15Vdc..... TMP15215C
Split Core .....Add the suffix "S" to the part number
Extended Temp. Range (-20°C to +60°C)
Add the suffix "T" to the part number

ORDERING INFORMATION
Example: 100A, Split Core with a ±5V Output
CTG-101X5S

**Sensor size "D" split-core models are not UL listed.

APPLICATION AND ORDERING DATA

CURRENT RANGE	±10Vdc OUTPUT	±5Vdc OUTPUT	SENSOR SIZE
0-100A	CTG-101	CTG-101X5	D**
0-200A	CTG-201	CTG-201X5	D**
0-300A	CTG-301	CTG-301X5	D**
0-400A	CTG-401	CTG-401X5	D**
0-500A	CTG-501	CTG-501X5	E
	CTG-501FS	CTG-501FSX5	F
	CTG-501HS	CTG-501HX5S	Z
0-600A	CTG-601	CTG-601X5	E
	CTG-601FS	CTG-601FSX5	F
	CTG-601HS	CTG-601HX5S	Z
0-800A	CTG-801	CTG-801X5	E
	CTG-801FS	CTG-801FSX5	F
	CTG-801HS	CTG-801HX5S	Z
0-1000A	CTG-102	CTG-102X5	E
	CTG-102FS	CTG-102FSX5	F
	CTG-102EES	CTG-102EESX5	EE
	CTG-102HS	CTG-102HX5S	Z
0-1500A	CTG-152	CTG-152X5	E
	CTG-152FS	CTG-152FSX5	F
	CTG-152EES	CTG-152EESX5	EE
	CTG-152HS	CTG-152HX5S	Z
0-2000A	CTG-202	CTG-202X5	E
	CTG-202FS	CTG-202FSX5	F
	CTG-202EES	CTG-202EESX5	EE
	CTG-202HS	CTG-202HX5S	Z
0-2500A	CTG-252	CTG-252X5	E
	CTG-252FS	CTG-252FSX5	F
	CTG-252EES	CTG-252EESX5	EE
0-3000A	CTG-302EES	CTG-302EESX5	EE
	CTG-302HS	CTG-302HX5S	Z
0-4000A	CTG-402HS	CTG-402HX5S	Z
0-5000A	CTG-502HS	CTG-502HX5S	Z

DIMENSIONS

Case D & E

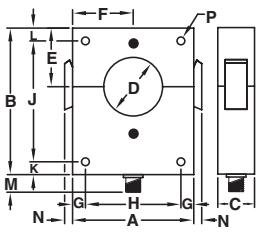

Case EE & F Split Core

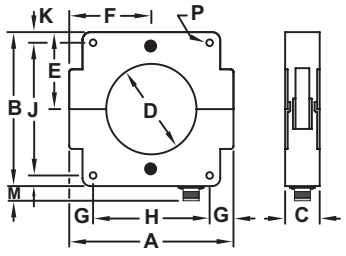

Case Z

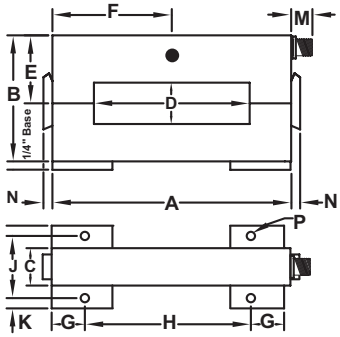

SENS. SIZE	SENSOR DIMENSIONS (INCHES)														WT. LBS.
	A	B	C	D	E	F	G	H	J	K	L	M	N	P	
D	3 1/8	4	3/4	1 1/8	1 1/2	1 9/16	1/2	2 1/8	NA	1/2	NA	1/2	1/4	11/64	.75
E	4 1/8	5	1 1/4	2	2	2 1/16	7/16	3 1/4	4 1/8	7/16	7/16	5/8	5/16	17/64	2
F	5 3/8	5 1/4	1 5/8	2 1/4	2 5/8	2 11/16	1 1/16	3 1/4	4 1/8	9/16	NA	5/8	NA	1/4	2.8
EE	7 3/4	7 1/4	1 5/8	4 1/4	3 5/8	3 7/8	1 1/8	5 1/2	6 1/4	1/2	NA	5/8	NA	5/16	4.5
Z	7 3/16	3 3/4	1 5/16	1 1/4 X 4 1/2	2 9/64	3 1/2	1	5	1 7/8/	5/16	NA	5/16	1/4	3/16	2.8

CONNECTIONS

* For positive output, positive current conductor through "Red Dot" side of sensor.

TABLE 1 SENSOR SIZES D, Z

Plastic Connector 8' Rubber Cable Pin Leads		
1 WHITE	-	OUTPUT*
2 GREEN	+	
6 BLACK	-15V	
8 RED	+15V	Inst. Power
1 WHITE	COM	

TABLE 2 SENSOR SIZES E, EE, F

Metal Connector 8' Rubber Cable Pin Leads		
A WHITE	-	OUTPUT*
B GREEN	+	
C BLACK	-15V	
D RED	+15V	Inst. Power
A WHITE	COM	

FLEX-CORE®
Div. Morlan & Associates, Inc.
4970 Scioto Darby Rd. Hilliard, Ohio 43026
WWW.FLEX-CORE.COM
sales@flex-core.com
PHONE (614) 889-6152
TECH. ASSISTANCE (614) 876-8308
FAX # (614) 876-8538

HALL EFFECT DC CURRENT TRANSDUCER — MODEL CTH

Current Sensor with Output Amplifier
5Vdc, 10Vdc, or 4-20mAdc Output

DESCRIPTION

The CTH Series Current Transducer is similar to the CTG Series but offers a 4-20mA output signal or a 4-12-20mA bi-directional output signal. The CTH current transducer can be operated from either a 24Vdc source or a low cost 24Vac control transformer. Available options are split core, extended temperature range, ruggedized design and 15Vdc instrument power.

FEATURES

- **ACCURACY 0.5%**
- Sensor & Amplifier in one package
- Split Core Available
- Output is proportional in direction and magnitude to the input current flow through the window.

APPLICATIONS

- **Current Sensing**

SPECIFICATIONS

INPUT

Current.....(See table).....dc or Peak ac
Over Current..... 10 X rating
Instrument Power..... 24Vdc or ac ± 10%
Instrument Current..... 25mA + load current
Dielectric Test .....(bare bus to output).....3750Vac
Split Core Sens. Size D.....1000Vdc

OUTPUT

Accuracy and Linearity ..... (All models except*) .....±0.5% F.S.
*All CTH-050 Models .....±1.0% F.S.
*All CTH-025 Models .....±2.0% F.S.
Load on Output..... (4-20mA).....0-500Ω
(5V & 10V).....> 2KΩ
Response Time..... (to 90%) (typical).....500µs
Temperature Effects.....(0°C to +40°C) ..... ±0.025%/°C
Temperature Range..... 0°C to +40°C

AVAILABLE OPTIONS

Add Suffix in order shown
Split Core ..... Add suffix "**S**"
Extended Temp. Range.....(-40°C to +60°C)..... Add Suffix "**T**"
Ruggedized .....(potted).....Add Suffix "**R**"
Instrument Power.....15Vdc, ±10.0% ....Add Suffix "**-15**"
12Vdc, ±10.0%..... Add Suffix "**-12**"
Optional 24Vdc Power Supply available TMP15124C

ORDERING INFORMATION

Example: 0-300Adc Input ,
4-20mA Output, Split-Core Option
and Extended Temperature Range.
CTH-301LST

Circular Window Models

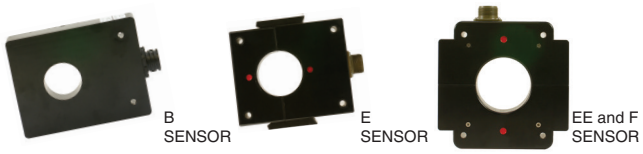

Input DC Current	4-20mAdc Output**	4-12-20mA dc Output	±5Vdc Output	±10Vdc Output	Sensor Size
0-25	025	025M	025X5	025D	B
0-50	050	050M	050X5	050D	B
0-100	101	101M	101X5	101D	B
0-100	101L	101LM	101LX5	101LD	D
0-200	201L	201LM	201LX5	201LD	D
0-300	301L	301LM	301LX5	301LD	D
0-400	401L	401LM	401LX5	401LD	D
0-500	501L	501LM	501LX5	501LD	E
0-500	501FLS	501FLMS	501FSX5	501FSD	F
0-600	601L	601LM	601LX5	601LD	E
0-600	601FLS	601FLMS	601FSX5	601FSD	F
0-800	801L	801LM	801LX5	801LD	E
0-800	801FLS	801FLMS	801FSX5	801FSD	F
0-1000	102L	102LM	102LX5	102LD	E
0-1000	102FLS	102FLMS	102FSX5	102FSD	F
0-1000	102EELS	102EELMS	102EESX5	102EESD	EE
0-1200	122L	122LM	122LX5	122LD	E
0-1200	122FLS	122FLMS	122FSX5	122FSD	F
0-1200	122EELS	122EELMS	122EESX5	122EESD	EE
0-1500	152L	152LM	152LX5	152LD	E
0-1500	152FLS	152FLMS	152FSX5	152FSD	F
0-1500	152EELS	152EELMS	152EESX5	152EESD	EE

**4-20mAdc Model is unidirectional only.

Split Core option "S" is available except for Sens. Size B
All Sensor Sizez F, EE, and Z are Standard Split Core.

Rectangular Window Models



Input DC Current	4-20mAdc Output	4-12-20mA dc Output	±5Vdc Output	±10Vdc Output	Sensor Size
0 - 500	501HS	501HMS	501HX5S	501HDS	Z
0 - 600	601HS	601HMS	601HX5S	601HDS	Z
0 - 800	801HS	801HMS	801HX5S	801HDS	Z
0 - 1000	102HS	102HMS	102HX5S	102HDS	Z
0 - 1200	122HS	122HMS	122HX5S	122HDS	Z
0 - 1500	152HS	152HMS	152HX5S	152HDS	Z

FLEX-CORE®
Div. Morlan & Associates, Inc.
4970 Scioto Darby Rd. Hilliard, Ohio 43026
WWW.FLEX-CORE.COM
sales@flex-core.com
PHONE (614) 889-6152
TECH. ASSISTANCE (614) 876-8308
FAX # (614) 876-8538

CURRENT TRANSDUCERS

CASE DIMENSIONS & CONNECTIONS — *MODEL* CTH

CASE DIMENSIONS D & E

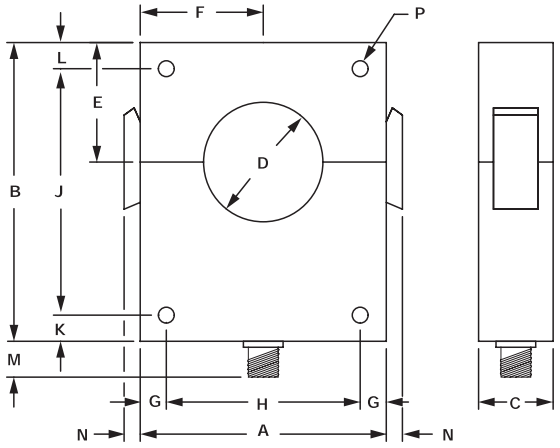

CASE DIMENSIONS F & E

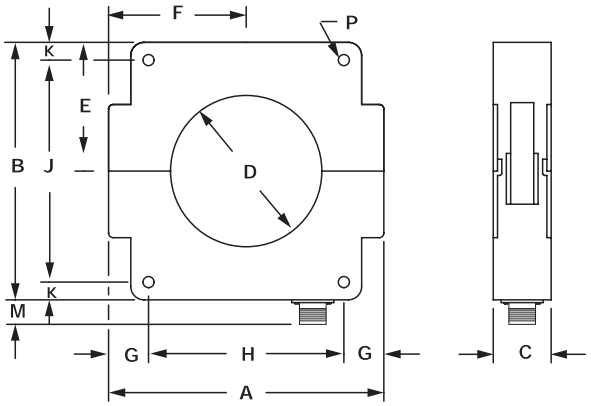

CASE DIMENSIONS B

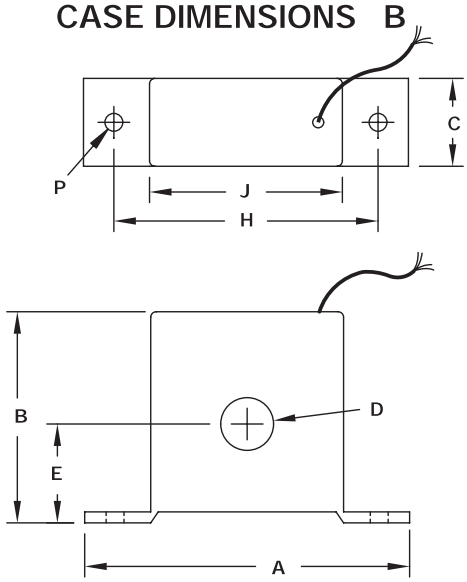

Use Sensor Size D Cable Assembly for connections.
22 AWG

CASE DIMENSIONS Z

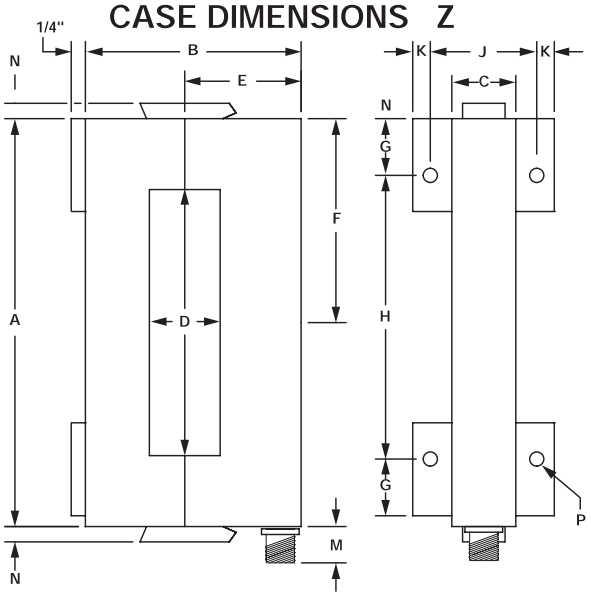

All Dimensions in Inches

SENS. SIZE	SENSOR DIMENSIONS														WT. LBS.
	A	B	C	D	E	F	G	H	J	K	L	M	N	P	
B	3 5/8	2 9/16	1	5/8	1 5/32	NA	NA	2 3/4	2 3/16	NA	NA	NA	NA	3/16	.2
D	3 1/8	4	25/32	1 1/8	1 1/2	1 9/16	1/2	2 1/8	NA	1/2	NA	3/8	1/4	11/64	.75
E	4 1/8	5	1 1/4	2	2	2 1/16	7/16	3 1/4	4 1/8	7/16	7/16	5/8	5/16	17/64	2
F	5 3/8	5 1/4	1 5/8	2 1/4	2 5/8	2 11/16	1 1/16	3 1/4	4 1/8	9/16	NA	5/8	NA	1/4	2.8
EE	7 3/4	7 1/4	1 5/8	4 1/4	3 5/8	3 7/8	1 1/8	5 1/2	6 1/4	1/2	NA	5/8	NA	5/16	4.5
Z	7 3/16	3 15/16	1 5/16	1 1/4 X 4 1/2	2 9/64	3 1/2	1	5	1 7/8	5/16	NA	1/2	5/16	3/16	2.8

CABLE ASSEMBY							
SENSOR SIZE D, Z				SENSOR SIZE E, EE, F			
Plastic Connector 8' Rubber Cable 18 AWG				Metal Connector 8' Rubber Cable 18 AWG			
Pins	Leads			Pins	Leads		
1	WHITE	-	OUTPUT*	A	WHITE	-	OUTPUT*
2	GREEN	+		B	GREEN	+	
6	BLACK	COM		C	BLACK	COM	
8	RED	+24V	INST. PWR	D	RED	+24V	INST. PWR

*For positive output, positive current cable through "Red Dot" side of sensor.

FLEX-CORE®
Div. Morlan & Associates, Inc.
4970 Scioto Darby Rd. Hilliard, Ohio 43026

WWW.FLEX-CORE.COM
sales@flex-core.com

PHONE (614) 889-6152
TECH. ASSISTANCE (614) 876-8308
FAX # (614) 876-8538

CURRENT TRANSDUCERS

HALL EFFECT CURRENT TRANSDUCER — *MODEL* CTL

FREQUENCY RANGE DC TO 1000 HERTZ

FEATURES AND APPLICATIONS

- 2200 Volt line-to-output isolation.**
- DC to 1000 Hertz response.
- Available in split-core configurations, except Model 51.
- Response time less than 100 microseconds.
- Output is proportional in **direction and magnitude** to the current flow through the window.

**1000 Volt Model 51 and Split Core Options Models 101, 201 and 401.

- Overload capability to **50 times rating** (at 60Hz).
- Stability maintained during severe vibration.
- Easy installation.
- Replaces shunts.
- No insertion loss.
- For use with model CTA signal conditioners.
- Ideal for use on AC systems with dc components and/or chopped waveforms.

c UL us
E500652

CIRCULAR WINDOW MODELS (0.5% Accuracy & Linearity)

***Split core models are not UL listed.**

PEAK CURRENT (A)	EXCITATION (NOMINAL) (mA)	OUTPUT (NOMINAL) (mV)	TEMPERATURE		RESISTANCE (Ω)		SENSOR SIZE	CATALOG NUMBER
			EFFECTS	RANGE (C°)	INPUT	OUTPUT		
35	200	35	1%	-10°C to +40°C	6±3	25±15	A	CTL-51/35
50	200	50	1%	-10°C to +40°C	6±3	25±15	A	CTL-51/50
50	200	50	1%	-10°C to +40°C	6±3	25±15	*C	CTL-101/50
75	200	75	1%	-10°C to +40°C	6±3	25±15	*C	CTL-101/75
100	200	100	1%	-10°C to +40°C	6±3	25±15	*C	CTL-101/100
150	200	75	1%	-10°C to +40°C	6±3	25±15	*D	CTL-201/150
200	200	100	1%	-10°C to +40°C	6±3	25±15	*D	CTL-201/200
300	200	75	1%	-10°C to +40°C	6±3	25±15	*D	CTL-401/300
400	200	100	1%	-10°C to +40°C	6±3	25±15	*D	CTL-401/400
500	200	40	1%	-10°C to +40°C	23±5	25±15	E	CTL-601/500
600	200	50	1%	-10°C to +40°C	23±5	25±15	E	CTL-601/600
800	200	40	1%	-10°C to +40°C	23±5	25±15	E	CTL-202/800
1000	200	50	1%	-10°C to +40°C	23±5	25±15	E	CTL-202/1000
1500	200	75	1%	-10°C to +40°C	23±5	25±15	E	CTL-202/1500
2000	200	100	1%	-10°C to +40°C	23±5	25±15	E	CTL-202/2000
500	200	40	1%	-10°C to +40°C	23±5	25±15	F	CTL-601FS/500
600	200	50	1%	-10°C to +40°C	23±5	25±15	F	CTL-601FS/600
800	200	40	1%	-10°C to +40°C	23±5	25±15	F	CTL-202FS/800
1000	200	50	1%	-10°C to +40°C	23±5	25±15	F	CTL-202FS/1000
1500	200	75	1%	-10°C to +40°C	23±5	25±15	F	CTL-202FS/1500
2000	200	100	1%	-10°C to +40°C	23±5	25±15	F	CTL-202FS/2000
1000	200	100	1%	-10°C to +40°C	23±5	25±15	EE	CTL-202EES/1000
1500	200	150	1%	-10°C to +40°C	23±5	25±15	EE	CTL-202EES/1500
2000	200	200	1%	-10°C to +40°C	23±5	25±15	EE	CTL-202EES/2000
2500	200	85	1%	-10°C to +40°C	23±5	25±15	EE	CTL-302EES/2500
3000	200	100	1%	-10°C to +40°C	23±5	25±15	EE	CTL-302EES/3000



NOTE: See next page for CTA Options

CIRCULAR MODEL DIMENSIONS

Sensor A, C, D, & E

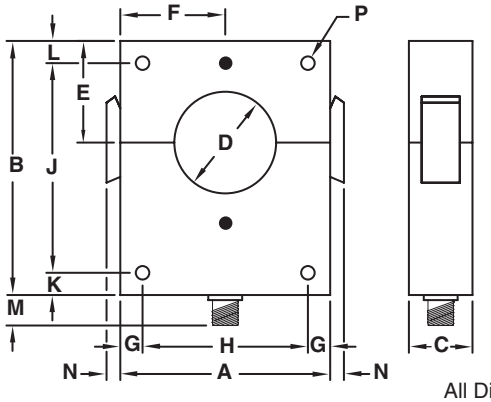

Sensor EE & F

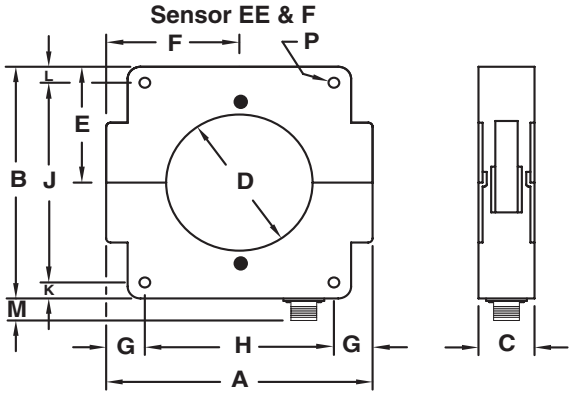

All Dimensions In Inches

SENS. SIZE	SENSOR DIMENSIONS														WT. LBS.
	A	B	C	D	E	F	G	H	J	K	L	M	N	P	
A	1 1/8	1 1/2	1/2	3/8	9/16	9/16	9/32	9/16	NA	3/16	NA	NA	NA	1/8	0.12
C	2	2	3/4	3/4	7/8	1	1/4	1 1/2	NA	1/4	NA	NA	1/4	5/32	0.28
D	3 1/8	4	3/4	1 1/8	1 1/2	1 9/16	1/2	2 1/8	NA	1/2	NA	1/2	1/4	11/64	0.75
E	4 1/8	5	1 1/4	2	2	2 1/16	7/16	3 1/4	4 1/8	7/16	7/16	5/8	5/16	17/64	2.0
F	5 3/8	5 1/4	1 5/8	2 1/4	2 5/8	2 11/16	1 1/16	3 1/4	4 1/8	9/16	9/16	5/8	NA	1/4	2.8
EE	7 3/4	7 1/4	1 5/8	4 1/4	3 5/8	3 7/8	1 1/8	5 1/2	6 1/4	1/2	1/2	5/8	NA	5/16	4.5

CABLE LENGTHS
Solid core models supplied with integral 18" cables for sensor sizes A,C,D.
All others have 8' cable.
Split core models use 4 pin connector-supplied with mating connector and 8 ft. 4 conductor cable.

FLEX-CORE®
Div. Morlan & Associates, Inc.
4970 Scioto Darby Rd. Hilliard, Ohio 43026
WWW.FLEX-CORE.COM
sales@flex-core.com
PHONE (614) 889-6152
TECH. ASSISTANCE (614) 876-8308
FAX # (614) 876-8538

CURRENT TRANSDUCERS

SIGNAL CONDITIONERS — *MODEL* CTA

FOR USE WITH MODEL CTL CURRENT TRANSDUCERS



DIRECT MEASUREMENT MODELS

- Provide output which is **directly proportional to amplitude of AC and/or dc input** waveform.

RMS MODELS

- Provide output which is **proportional to RMS value of AC and/or dc input** waveform.

MODEL CTL CURRENT TRANSDUCER	TRANSDUCER INPUT CURRENT RANGE	DIRECT MODELS OUTPUT PROPORTIONAL TO AC/DC INPUT					RMS MODELS OUTPUT PROPORTIONAL TO RMS OF AC/DC INPUT			
		STANDARD AC/DC OUTPUTS					STANDARD DC OUTPUTS			
		±5V**	±10V**	4-12-20mA**	4-20mA	±1mA**	0-5Vdc	0-10Vdc	4-20mAdc	0-1mAdc
CTL-51/35	0-35A	CTA201RX5	CTA201R	CTA212RY42	CTA212R	CTA201RA	CTA213RX5	CTA213R	CTA215R	CTA214R
CTL-51/50	0-50A	CTA201X5	CTA201	CTA212Y42	CTA212	CTA201A	CTA213X5	CTA213	CTA215	CTA214
CTL-101/50	0-50A	CTA201X5	CTA201	CTA212Y42	CTA212	CTA201A	CTA213X5	CTA213	CTA215	CTA214
CTL-101/75	0-75A	CTA201HX5	CTA201H	CTA212HY42	CTA212H	CTA201HA	CTA213HX5	CTA213H	CTA215H	CTA214H
CTL-101/100	0-100A	CTA201PX5	CTA201P	CTA212PY42	CTA212P	CTA201PA	CTA213PX5	CTA213P	CTA215P	CTA214P
CTL-201/150	0-150A	CTA201HX5	CTA201H	CTA212HY42	CTA212H	CTA201HA	CTA213HX5	CTA213H	CTA215H	CTA214H
CTL-201/200	0-200A	CTA201PX5	CTA201P	CTA212PY42	CTA212P	CTA201PA	CTA213PX5	CTA213P	CTA215P	CTA214P
CTL-401/300	0-300A	CTA201HX5	CTA201H	CTA212HY42	CTA212H	CTA201HA	CTA213HX5	CTA213H	CTA215H	CTA214H
CTL-401/400	0-400A	CTA201PX5	CTA201P	CTA212PY42	CTA212P	CTA201PA	CTA213PX5	CTA213P	CTA215P	CTA214P
CTL-601/500	0-500A	CTA201FX5	CTA201F	CTA212FY42	CTA212F	CTA201FA	CTA213FX5	CTA213F	CTA215F	CTA214F
CTL-601/600	0-600A	CTA201X5	CTA201	CTA212Y42	CTA212	CTA201A	CTA213X5	CTA213	CTA215	CTA214
CTL-202/800	0-800A	CTA201FX5	CTA201F	CTA212FY42	CTA212F	CTA201FA	CTA213FX5	CTA213F	CTA215F	CTA214F
CTL-202/1000	0-1000A	CTA201X5	CTA201	CTA212Y42	CTA212	CTA201A	CTA213X5	CTA213	CTA215	CTA214
CTL-202/1500	0-1500A	CTA201HX5	CTA201H	CTA212HY42	CTA212H	CTA201HA	CTA213HX5	CTA213H	CTA215H	CTA214H
CTL-202/2000	0-2000A	CTA201PX5	CTA201P	CTA212PY42	CTA212P	CTA201PA	CTA213PX5	CTA213P	CTA215P	CTA214P
CTL-601FS/500	0-500A	CTA201FX5	CTA201F	CTA212FY42	CTA212F	CTA201FA	CTA213FX5	CTA213F	CTA215F	CTA214F
CTL-601FS/600	0-600A	CTA201X5	CTA201	CTA212Y42	CTA212	CTA201A	CTA213X5	CTA213	CTA215	CTA214
CTL-202FS/800	0-800A	CTA201FX5	CTA201F	CTA212FY42	CTA212F	CTA201FA	CTA213FX5	CTA213F	CTA215F	CTA214F
CTL-202FS/1000	0-1000A	CTA201X5	CTA201	CTA212Y42	CTA212	CTA201A	CTA213X5	CTA213	CTA215	CTA214
CTL202FS/1500	0-1500A	CTA201HX5	CTA201H	CTA212HY42	CTA212H	CTA201HA	CTA213HX5	CTA213H	CTA215H	CTA214H
CTL-202FS/2000	0-2000A	CTA201PX5	CTA201P	CTA212PY42	CTA212P	CTA201PA	CTA213PX5	CTA213P	CTA215P	CTA214P
CTL-202EES/1000	0-1000A	CTA201PX5	CTA201P	CTA212PY42	CTA212P	CTA201PA	CTA213PX5	CTA213P	CTA215P	CTA214P
CTL-202EES/1500	0-1500A	CTA201KX5	CTA201K	CTA212KY42	CTA212K	CTA201KA	CTA213KX5	CTA213K	CTA215K	CTA214K
CTL-202EES/2000	0-2000A	CTA201LX5	CTA201L	CTA212LY42	CTA212L	CTA201LA	CTA213LX5	CTA213L	CTA215L	CTA214L
CTL-302EES/2500	0-2500A	CTA201JX5	CTA201J	CTA212JY42	CTA212J	CTA201JA	***	***	***	***
CTL-302EES/3000	0-3000A	CTA201PX5	CTA201P	CTA212PY42	CTA212P	CTA201PA	***	***	***	***

**For bidirectional calibration, use direct model CTA and CTL with "Y122" suffix.
***Not available in RMS models, consult factory for other models.
NOTE: Use direct models for true DC and use RMS models for AC, or AC with DC component or chopped waveform.

CTL Options

Extended Temp. Range..... (-40°C to +65°C)..... Option "-T"
Split-Core (Sensor Sizes C, D, E)..... Option "-S"
**Bidirectional Operation ..... Option "-Y122"

CTA Options

230 Vac Instrument Power .....230Vac..... Option "-22"
DC Instrument Power .....9-18Vdc..... Option "-12"
18-36Vdc..... Option "-24"
36-60Vdc..... Option "-48"
CTA212 .....4-12-20mA Output.....Option "Y42"

ORDERING INFORMATION

EXAMPLE: 200A split core current transducer requiring 200mA excitation, with output of 100mV.
CTL-201S/200
TO ORDER WITH MODEL CTA SIGNAL CONDITIONER
Locate transducer model number in first column.
Specify model CTA signal conditioner model number based on required analog output.
The transducer and signal conditioner must be ordered as separate items although supplied as a calibrated set.

FLEX-CORE®
Div. Morlan & Associates, Inc.
4970 Scioto Darby Rd. Hilliard, Ohio 43026
WWW.FLEX-CORE.COM
sales@flex-core.com
PHONE (614) 889-6152
TECH. ASSISTANCE (614) 876-8308
FAX # (614) 876-8538

CURRENT TRANSDUCERS

HALL EFFECT CURRENT TRANSDUCERS — *MODEL* CTL

FREQUENCY RANGE DC TO 1000 HERTZ

FEATURES AND APPLICATIONS

- 2200 Volt line-to-output isolation.**
- DC to 1000 Hertz response.
- All models are split core configurations.
- Response time less than 100 microseconds.
- Output is proportional in **direction and magnitude** to the current flow through the window.
- Overload capability to **50 times rating** (at 60Hz).
- Stability maintained during severe vibration.
- Easy installation.
- Replaces shunts.
- No insertion loss.
- For use with model CTA signal conditioners.
- Ideal for use on AC systems with dc components and/or chopped waveforms.

c UL us
E500652

RECTANGULAR WINDOW (BUS BAR) MODELS

PEAK CURRENT (A)	EXCITATION (NOMINAL) (mA)	OUTPUT (NOMINAL) (mV)	TEMPERATURE		RESISTANCE (Ω)		LINEARITY & ACCURACY	SENSOR SIZE	CATALOG NUMBER
			EFFEECTS	RANGE (C°)	INPUT	OUTPUT			
500	200	50	1%	-10C° to +40C°	23±5	25±15	1%	Z	CTL-202HS/500
1000	200	100	1%	-10C° to +40C°	23±5	25±15	1%	Z	CTL-202HS/1000
1500	200	150	1%	-10C° to +40C°	23±5	25±15	1%	Z	CTL-202HS/1500
2000	200	200	1%	-10C° to +40C°	23±5	25±15	1%	Z	CTL-202HS/2000
2000	200	60	1%	-10C° to +40C°	23±5	25±15	1%	Z	CTL-502HS/2000
2500	200	75	1%	-10C° to +40C°	23±5	25±15	1%	Z	CTL-502HS/2500
3000	200	90	1%	-10C° to +40C°	23±5	25±15	1%	Z	CTL-502HS/3000
4000	200	120	1%	-10C° to +40C°	23±5	25±15	1%	Z	CTL-502HS/4000
5000	200	150	1%	-10C° to +40C°	23±5	25±15	1%	Z	CTL-502HS/5000
1000	200	100	1%	-10C° to +40C°	23±5	25±15	1%	ZZ	CTL-202ZZS/1000*
1500	200	150	1%	-10C° to +40C°	23±5	25±15	1%	ZZ	CTL202ZZS/1500*
2000	200	200	1%	-10C° to +40C°	23±5	25±15	1%	ZZ	CTL202ZZS/2000*
2500	200	125	1%	-10C° to +40C°	23±5	25±15	1%	ZZ	CTL-302ZZS/2500*
3000	200	150	1%	-10C° to +40C°	23±5	25±15	1%	ZZ	CTL-302ZZS/3000*
2500	200	75	1%	-10C° to +40C°	23±5	25±15	1%	G	CTL-502S/2500
3000	200	90	1%	-10C° to +40C°	23±5	25±15	1%	G	CTL-502S/3000
4000	200	120	1%	-10C° to +40C°	23±5	25±15	1%	G	CTL-502S/4000
5000	200	150	1%	-10C° to +40C°	23±5	25±15	1%	G	CTL-502S/5000
5000	200	50	1%	-10C° to +40C°	23±5	25±15	1%	H	CTL-103S/5000
6000	200	60	1%	-10C° to +40C°	12±5	32±10	1%	H	CTL-103S/6000
7000	200	70	1%	-10C° to +40C°	12±5	32±10	1%	H	CTL-103S/7000
8000	200	80	1%	-10C° to +40C°	12±5	32±10	1%	H	CTL-103S/8000
9000	200	90	1%	-10C° to +40C°	12±5	32±10	1%	H	CTL-103S/9000
10000	200	100	1%	-10C° to +40C°	12±5	32±10	1%	H	CTL-103S/10000
12000	200	60	1%	-10C° to +40C°	12±5	32±10	2%	H	CTL-203S/12000
15000	200	75	1%	-10C° to +40C°	12±5	32±10	2%	H	CTL-203S/15000
18000	200	90	1%	-10C° to +40C°	12±5	32±10	2%	H	CTL-203S/18000
20000	200	100	1%	-10C° to +40C°	12±5	32±10	2%	H	CTL-203S/20000
25000	200	85	1%	-10C° to +40C°	12±5	32±10	2%	HH	CTL-303S/25000
30000	200	100	1%	-10C° to +40C°	12±5	32±10	2%	HH	CTL/303S/30000
35000	200	90	1%	-10C° to +40C°	12±5	32±10	2%	HH	CTL-403S/35000
40000	200	100	1%	-10C° to +40C°	12±5	32±10	2%	HH	CTL-403S/40000



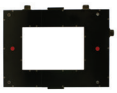
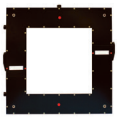

NOTE: See next page for CTL Options

RECTANGULAR MODEL CTL DIMENSIONS

Sensor Z and ZZ

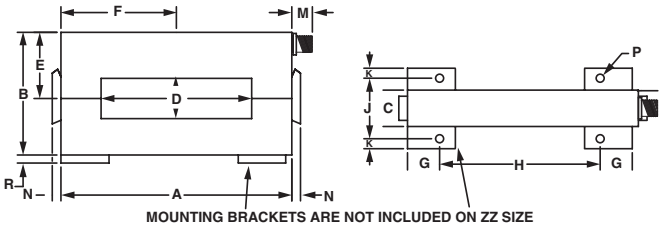

MOUNTING BRACKETS ARE NOT INCLUDED ON ZZ SIZE

Sensor G, H and HH

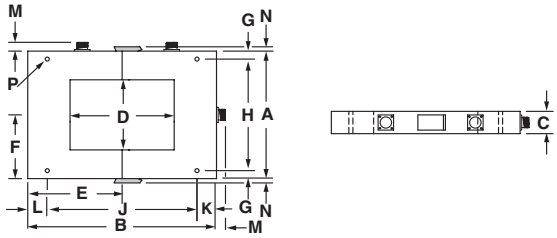

All Dimensions In Inches

SENS. SIZE	SENSOR DIMENSIONS															WT. LBS.
	A	B	C	D	E	F	G	H	J	K	L	M	N	P	R	
G	7 3/4	12	1 3/4	3 x 6 1/2	6	3 7/8	5/8	6 1/2	10 3/4	5/8	5/8	5/8	5/16	5/16	N/A	12.3
H	10	13 3/4	1 3/4	5 1/2 X 8	6 1/2	5	5/8	8 3/4	11 1/2	1 1/2	3/4	5/8	5/16	5/16	N/A	13
HH	21	21	2	13 X 13	10 1/2	10 1/2	1 1/2	18	18	1 1/2	1 1/2	5/8	11/16	3/8	N/A	44
Z	7 3/16	3 15/16	1 5/16	1 1/4 X 4 1/2	2 9/64	3 1/2	1	5	1 7/8	5/16	N/A	3/8	5/16	3/16	1/4	2.8
ZZ	7 3/16	5 1/2	1 1/8	2 7/16 X 4 1/2	2 1/2	3 1/2	N/A	N/A	N/A	N/A	N/A	3/8	5/16	N/A	N/A	3.5

CABLE LENGTHS
All units are supplied with a detachable 8' cable.

FLEX-CORE®
Div. Morlan & Associates, Inc.
4970 Scioto Darby Rd. Hilliard, Ohio 43026
WWW.FLEX-CORE.COM
sales@flex-core.com
PHONE (614) 889-6152
TECH. ASSISTANCE (614) 876-8308
FAX # (614) 876-8538

CURRENT TRANSDUCERS

SIGNAL CONDITIONERS — *MODEL* CTA

FOR USE WITH MODEL CTL CURRENT TRANSDUCERS



DIRECT MEASUREMENT MODELS

- Provide output which is directly **proportional to amplitude of AC and/or dc input** waveform.

RMS MODELS

- Provide output which is **proportional to RMS value of AC and/or dc** input waveform.

MODEL CTL CURRENT TRANSDUCER	TRANSDUCER INPUT CURRENT RANGE	DIRECT MODELS OUTPUT PROPORTIONAL TO AC/DC INPUT					RMS MODELS OUTPUT PROPORTIONAL TO RMS OF AC/DC INPUT			
		STANDARD AC/DC OUTPUTS					STANDARD DC OUTPUTS			
		±/-5V**	±/-10V**	4-12-20mA**	4-20mA	±/-1mA**	0-5Vdc	0-10Vdc	4-20mA	0-1mAdc
CTL-202HS/500	0-500A	CTA201X5	CTA201	CTA212Y42	CTA212	CTA201A	CTA213X5	CTA213	CTA215	CTA214
CTL-202HS/1000	0-1000A	CTA201PX5	CTA201P	CTA212PY42	CTA212P	CTA201PA	CTA213PX5	CTA213P	CTA215P	CTA214P
CTL-202HS/1500	0-1500A	CTA201KX5	CTA201K	CTA212KY42	CTA212K	CTA201KA	CTA213KX5	CTA213K	CTA215K	CTA214K
CTL-202HS/2000	0-2000A	CTA201LX5	CTA201L	CTA212LY42	CTA212L	CTA201LA	***	***	***	***
CTL-502HS/2000	0-2000A	****	****	****	****	****	CTA213GX5	CTA213G	CTA215G	CTA214G
CTL-502HS/2500	0-2500A	CTA201HX5	CTA201H	CTA212HY42	CTA212H	CTA201HA	CTA213HX5	CTA213H	CTA215H	CTA214H
CTL-502HS/3000	0-3000A	CTA201WX5	CTA201W	CTA212WY42	CTA212W	CTA201WA	CTA213WX5	CTA213W	CTA215W	CTA214W
CTL-502HS/4000	0-4000A	CTA201NX5	CTA201N	CTA212NY42	CTA212N	CTA201NA	***	***	***	***
CTL-502HS/5000	0-5000A	CTA201KX5	CTA201K	CTA212KY42	CTA212K	CTA201KA	***	***	***	***
CTL-202ZZS/1000	0-1000A	CTA201PX5	CTA201P	CTA212PY42	CTA212P	CTA201PA	CTA213PX5	CTA213P	CTA215P	CTA214P
CTL-202ZZS/1500	0-1500A	CTA201KX5	CTA201K	CTA212KY42	CTA212K	CTA201KA	CTA213KX5	CTA213K	CTA215K	CTA214K
CTL-202ZZS/2000	0-2000A	CTA201LX5	CTA201L	CTA212LY42	CTA212L	CTA201LA	***	***	***	***
CTL-302ZZS/2500	0-2500A	CTA201NX5	CTA201N	CTA212NY42	CTA212N	CTA201NA	***	***	***	***
CTL-302ZZS/3000	0-3000A	CTA201KX5	CTA201K	CTA212KY42	CTA212K	CTA201KA	***	***	***	***
CTL-502S/2500	0-2500A	CTA201HX5	CTA201H	CTA212HY42	CTA212H	CTA201HA	CTA213HX5	CTA213H	CTA215H	CTA214H
CTL-502S/3000	0-3000A	CTA201WX5	CTA201W	CTA212WY42	CTA212W	CTA201WA	CTA213WX5	CTA213W	CTA215W	CTA214W
CTL-502S/4000	0-4000A	CTA201NX5	CTA201N	CTA212NY42	CTA212N	CTA201NA	***	***	***	***
CTL-502S/5000	0-5000A	CTA201KX5	CTA201K	CTA212KY42	CTA212K	CTA201KA	***	***	***	***
CTL-103S/5000	0-5000A	CTA201X5	CTA201	CTA212Y42	CTA212	CTA201A	CTA213X5	CTA213	CTA215	CTA214
CTL-103S/6000	0-6000A	CTA201GX5	CTA201G	CTA212GY42	CTA212G	CTA201GA	CTA213GX5	CTA213G	CTA215G	CTA214G
CTL-103S/7000	0-7000A	CTA201HX5	CTA201H	CTA212HY42	CTA212H	CTA201HA	CTA213HX5	CTA213H	CTA215H	CTA214H
CTL-103S/8000	0-8000A	CTA201JX5	CTA201J	CTA212JY42	CTA212J	CTA201JA	CTA213JX5	CTA213J	CTA215J	CTA214J
CTL-103S/9000	0-9000A	CTA201WX5	CTA201W	CTA212WY42	CTA212W	CTA201WA	***	***	***	**
CTL-103S/10000	0-10000	CTA201PX5	CTA201P	CTA212PY42	CTA212P	CTA201PA	***	***	***	**
CTL-203S/12000	0-12000A	CTA201GX5	CTA201G	CTA212GY42	CTA212G	CTA201GA	CTA213GX5	CTA213G	CTA215G	CTA214G
CTL-203S/15000	0-15000A	CTA201HX5	CTA201H	CTA212HY42	CTA212H	CTA201HA	***	***	***	***
CTL-203S/18000	0-18000A	CTA201WX5	CTA201W	CTA212WY42	CTA212W	CTA201WA	***	***	***	***
CTL-203S/20000	0-20000A	CTA201PX5	CTA201P	CTA212PY42	CTA212P	CTA201PA	***	***	***	***
CTL303S/25000	0-25000A	CTA201JX5	CTA201J	CTA212JY42	CTA212J	CTA201JA	***	***	***	***
CTL303S/30000	0-30000A	CTA201PX5	CTA201P	CTA212PY42	CTA212P	CTA201PA	***	***	***	***
CTL403S/35000	0-35000A	CTA201WX5	CTA201W	CTA212WY42	CTA212W	CTA201WA	***	***	***	***
CTL403S/40000	0-40000A	CTA201PX5	CTA201P	CTA212PY42	CTA212P	CTA201PA	***	***	***	***

**For bidirectional calibration, use direct model CTA and CTL with "Y122" suffix.
***Not available in RMS models, consult factory for other models.
****Not available in direct models.
NOTE: Use direct models for true DC and use RMS models for AC, or AC with DC component or chopped waveform.

CTL Options

Extended Temp. Range..... (-40°C to +65°C).....Option "-T"
**Bidirectional operation .....Option "-Y122"

CTA Options

230 Vac Instrument Power .....230Vac.....Option "-22"
DC Instrument Power .....9-18Vdc.....Option "-12"
18-36Vdc.....Option "-24"
36-60Vdc.....Option "-48"
4-12-20mA Output.....Option "Y42"

ORDERING INFORMATION

EXAMPLE: 2000A split core current transducer requiring 200mA excitation, with output of 200mV.
CTL-202HS/2000
TO ORDER WITH MODEL CTA SIGNAL CONDITIONER
Locate transducer model number in first column.
Specify model CTA signal conditioner model number based on required analog output.
The transducer and signal conditioner must be ordered as separate items although supplied as a calibrated set.

FLEX-CORE®
Div. Morlan & Associates, Inc.
4970 Scioto Darby Rd. Hilliard, Ohio 43026
WWW.FLEX-CORE.COM
sales@flex-core.com
PHONE (614) 889-6152
TECH. ASSISTANCE (614) 876-8308
FAX # (614) 876-8538

SIGNAL CONDITIONERS — MODEL CTL/CTA

MODEL CTA SPECIFICATIONS

INPUT

Standard 0-50mV

Option "R"	0-35mV	Option "W"	0-90mV
Option "F"	0-40mV	Option "P"	0-100mV
Option "G"	0-60mV	Option "N"	0-120mV
Option "H"	0-75mV	Option "K"	0-150mV
Option "J"	0-80mV	Option "L"	0-200mV

Frequency Range ..... dc - 5000Hz
Instrument Power ..... 115Vac, 50 - 400Hz, 2VA
Option **"-22"** ..... 230Vac, 50/60Hz, ±15%
DC Instrument Power
Option **"-12"** 9-18Vdc
Option **"-24"** 18-36Vdc
Option **"-48"** 36-60Vdc

OUTPUT

LINEARITY ..... + 0.1% F.S.
Output Ripple ..... <0.25% F.S.
Field Adjustable Gain 25%
Output Loading (Ω)
1mA 0-10K
10V, 5V ..... 2K min.
4-20mA 0-500
Response ..... (90%)
Direct models 40µs
RMS Models 200ms
Temperature Effect.....(0°C to +70°C) ..... ± 0.005%/°C
Weight ..... 1.4 Lbs.

CONNECTION DIAGRAMS

CTL MODELS WITH TWO CABLES

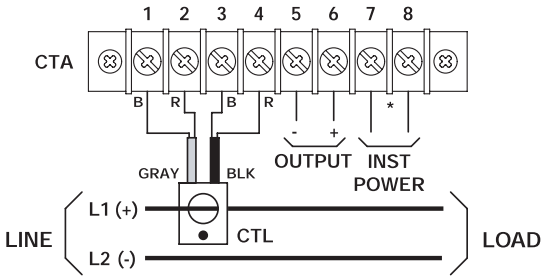

GRAY CABLE
Black..... sensor output signal (-)
Red..... sensor output signal (+)
*DC Inst. Pwr. positive on Term. 8

BLACK CABLE
Black.....sensor excitation (-)
Red.....sensor excitation (+)
All shields tied to terminal 3

CTL MODELS WITH ONE CABLE

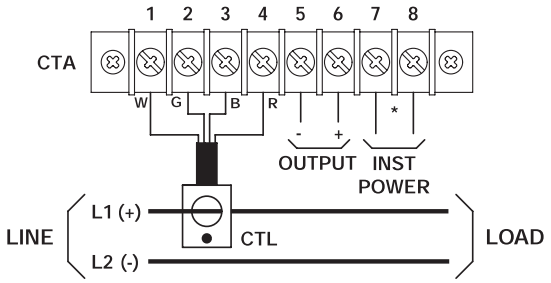

White .....sensor output signal (-)
Green .....sensor output signal (+)
Black..... sensor excitation (-)
Red..... sensor excitation (+)
*DC Inst. Pwr. positive on Term. 8
All shields tied to terminal 3

OUTPUT CABLE DESIGNATIONS

CAUTION: Connect CTL to CTA terminals 1, 2, 3, & 4 before applying instument power to CTA terminals 7 & 8 (+)

TWO CABLE

SENSOR SIZE
A, C, D (SOLID CORE)

CABLE	WIRE	SIGNAL
GRAY	BLACK	OUTPUT (-)
GRAY	RED	OUTPUT (+)
SHIELD	SHIELD	SHIELD
BLACK	BLACK	EXCITATION (-)
BLACK	RED	EXCITATION (+)

Red dot side of CTL must face positive supply.

ONE CABLE

SENSOR SIZE
E, EE, F, G, H, HH

PINS	COLOR	SIGNAL
A	WHITE	OUTPUT (-)
B	GREEN	OUTPUT (+)
C	BLACK	EXCITATION (-)
D	RED	EXCITATION (+)
E	SHIELD	SHIELD

Red dot side of CTL must face positive supply.

SENSOR SIZE
D (SPLIT CORE), Z, & ZZ

PINS	COLOR	SIGNAL
1	WHITE	OUTPUT (-)
2	GREEN	OUTPUT (+)
4	SHIELD	SHIELD
6	BLACK	EXCITATION (-)
8	RED	EXCITATION (+)

Red dot side of CTL must face positive supply.

CTA CASE DIMENSIONS

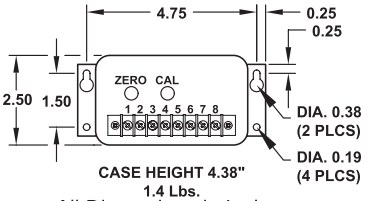

All Dimensions in Inches

FLEX-CORE®
Div. Morlan & Associates, Inc.
4970 Scioto Darby Rd. Hilliard, Ohio 43026
WWW.FLEX-CORE.COM
sales@flex-core.com
PHONE (614) 889-6152
TECH. ASSISTANCE (614) 876-8308
FAX # (614) 876-8538

VOLTAGE TRANSDUCERS

AC VOLTAGE TRANSDUCER — *MODEL* MVT

DIN RAIL MOUNTED AC VOLTAGE TRANSDUCER

FEATURES

- Ruggedized Polyamide DIN mount case.
- Slim profile allows maximum use of available space.
- Field selectable analog outputs. (“A” Suffix)
- Recessed terminals provide increased safety.

INPUT	STANDARD OUTPUTS MODEL MVT-		
AC VOLTAGE	0-1mAdc*	4-20mAdc	4-20mAdc**
0 to 150	150A	150E	150E2
0 to 300	300A	†300E	300E2
0 to 600††	†600A	†600E	†600E2

†† Potential Transformers Included. † Not UL Listed.

APPLICATIONS

- Ideal for use in enclosures with dimensional constraints.
- Designed for industrial environments.
- OEM measurement systems.
- Designed for use with potential transformers.
- Easily integrated into control systems.

ORDERING INFORMATION

Example: 0-150Vac Input with 4-20mA Output.
MVT-150E

c UL us LISTED E500652



*Models are self-powered from measured AC input line with **DIP switch selectable 0-1mA, 0-5Vdc, or 0-10Vdc output.**
**Denotes 4-20mA loop-powered unit, (15-40Vdc). “E” models require 85-135Vac instrument power.
1" wide case can be mounted on Rail EN50035 (DIN 1) or Rail EN50022 (DIN2).
Transducer output is derived from the absolute value of the input and calibrated as the RMS value of a sine wave input.

SPECIFICATIONS

INPUT
- Voltage ..... See Table
- Frequency Range ..... 48 to 65Hz, 60Hz Nom.
- Burden ..... 150V models 1.0VA
  300V,600V models 2.0VA
- Voltage Overload ..... F.S. Rating
- Dielectric Test....(Input/Output) 1500Vac

Instrument Power .... (E) 85-135Vac 50-60Hz, 3.5VA
(E2) ..... 15-40Vdc (Loop Powered)

OUTPUT
- Output Ripple ..... <1.0% F.S.
- Response Time...(99%) 400ms
- Field Adjustable Span ..... ± 5%

Output Loading (Ω)
- 4-20mA 0-500
- 4-20mA (24V Loop Power) 0-600
- Field Selectable
- 0-1mA 0-10K
- 0-5Vdc ..... > 5M
- 0-10Vdc ..... > 10M

ACCURACY (@ 60Hz) ..... ±0.25% F.S.
Includes effects of linearity and set point(10% to 100% F.S.)
Temperature Effect ..... (-20°C to +65°C) ..... ± 1.0%
E Output ..... (-20°C to +40°C) ..... ± 1.0%
Weight ..... 0.25 Lb.
600Vac Models ..... 0.9 Lb.

CONNECTION DIAGRAMS

SELF-POWERED MODEL MVT-***A

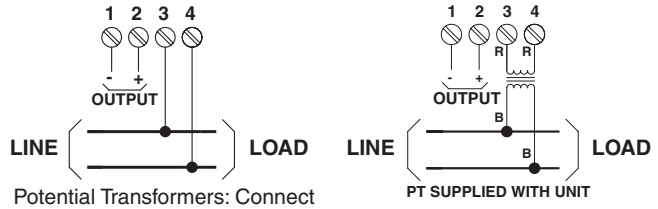

Potential Transformers: Connect as shown in 600V diagram.

150 & 300 Vac MODELS **600 Vac MODELS**

LOOP-POWERED MODEL MVT-***E2

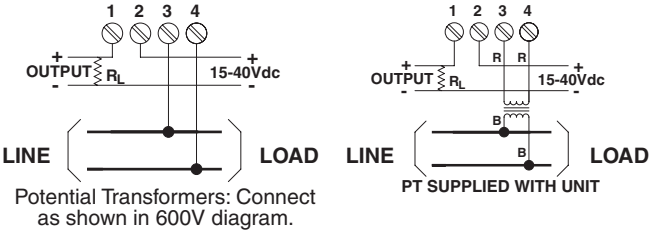

Potential Transformers: Connect as shown in 600V diagram.

150 & 300 Vac MODELS **600 Vac MODELS**

MODEL MVT-***E

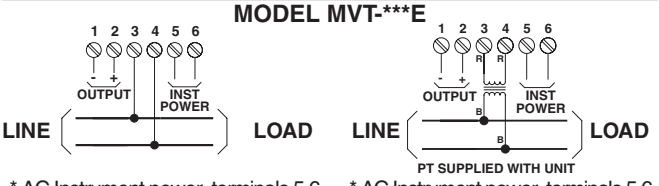

* AC Instrument power, terminals 5,6 — **150 & 300 Vac MODELS**

* AC Instrument power, terminals 5,6 — **600 Vac MODELS**

(MVT) DIMENSIONS (PT)

UNIT CAN BE MOUNTED ON:
RAIL EN50035 (DIN 1) RAIL EN50022 (DIN 2)

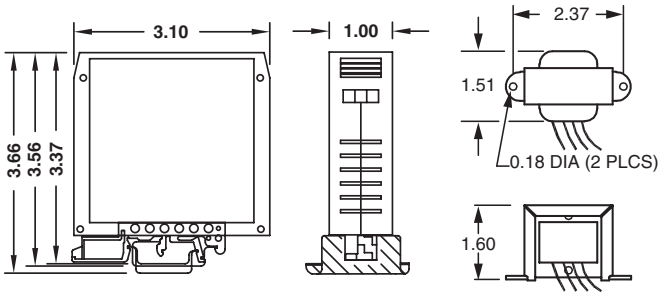

All Dimensions In Inches

OUTPUT SELECTIONS MVT-***A

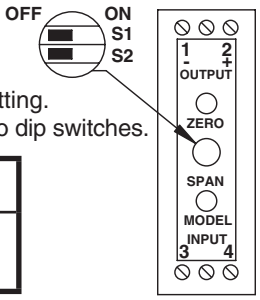

Units are shipped with 0-1mA setting.
Remove snap button for access to dip switches.

Output	Switch Pos. 1	Switch Pos. 2
0-1mA	OFF	OFF
0-5V	ON	ON
0-10V	ON	OFF

FLEX-CORE®
Div. Morlan & Associates, Inc.
4970 Scioto Darby Rd. Hilliard, Ohio 43026
WWW.FLEX-CORE.COM
sales@flex-core.com
PHONE (614) 889-6152
TECH. ASSISTANCE (614) 876-8308
FAX # (614) 876-8538

VOLTAGE TRANSDUCERS

AC VOLTAGE TRANSDUCER — MODEL AVT

AC VOLTAGE TRANSDUCER

FEATURES

- Accurate, reliable voltage measurement
- 2200Vac input/output isolation
- UL, CUL, CE Recognized

c UL us LISTED
E500652

CE

INPUT	OPTIONAL OUTPUTS MODEL NUMBER AVT-				
AC VOLTAGE	0-1mAdc*	4-20mAdc	4-20mAdc**	0-10Vdc*	0-5Vdc*
0-90	090A	090E	090E2	090C	090CX5
0-150	150A	150E	150E2	150C	150CX5
0-300	300A	300E	300E2	300C	300CX5
0-600	600A	600E	600E2	600C	600CX5

*Models are self-powered from measured voltage line.
**E2 loop-powered models require 15-24Vdc
E (4-20mA) models require 115Vac instument power.
Optional 230Vac instument power - Add suffix "22"
"E" models are not CE listed.

APPLICATIONS

- Designed for use in applications where inexpensive voltage measurement is required.
- Line voltage monitoring.
- AVT150 can be used with higher voltage potential transformers.



AVT-150A

ORDERING INFORMATION
Example: Single Phase 120Vac Input with 4-20mA Output.
AVT-150E

Transducer output is derived from the average absolute value of the input and calibrated as the RMS value of a sine wave input.

SPECIFICATIONS

INPUT

Voltage ..... See Tables
Frequency Range ..... 50/60 Hz
Burden
- 90Vac, 150Vac Models 1VA
- 300Vac Models 2VA
- 600Vac Models 3VA

Overload ..... Full Scale Rating
- 600Vac Models 575Vac

Dielectric Test ..... (Input/Output/Case) 2200Vac

Instrument Power
- Std. 4-20mA units ..... 115Vac, 50/60Hz, ±15%, 10VA max.
- "**-22**" Option ..... 230Vac, 50/60Hz, ±15%, 10VA max.

OUTPUT

ACCURACY ..... ± 0.25% F.S. @60Hz
Includes effects of linearity (10-100%) and setpoint.
Output Ripple ..... <1.0% F.S.
Response 400ms
Output Loading (Ω)
- 1mA ..... A 0-10K
- 4-20mA ..... E 0-1K
- 4-20mA ..... E2 ..... (@24Vdc)...0-600
- 5V & 10V ..... C & CX5 ..... ≥ 10M

Field Adjustable Cal. ..... ± 5%
Temperature Effect ..... ± 1.0% Rdg.
Temperature Range ..... -20°C to +60°C

CASE DIMENSIONS

MODELS A, C, CX5, & E2

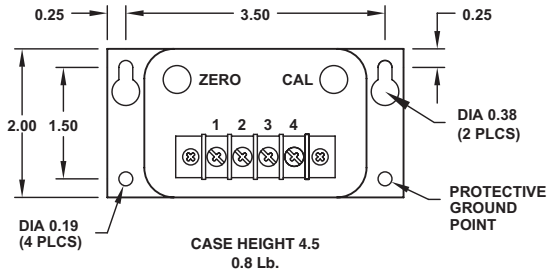

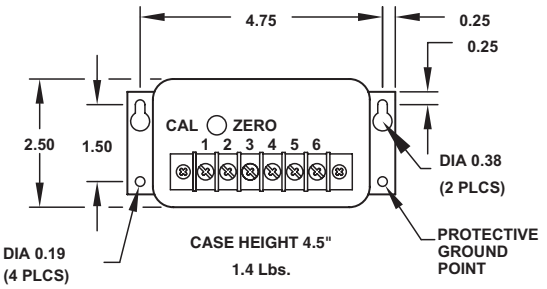

All Dimensions In Inches

CONNECTION DIAGRAMS

A, C, & CX5 OPTIONS

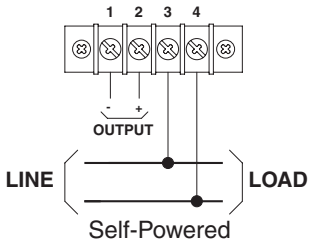

Self-Powered

E OPTION

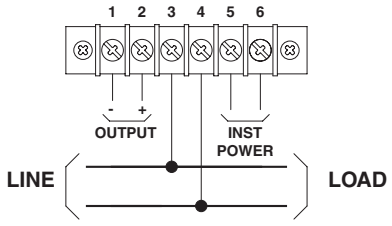

E2 OPTION

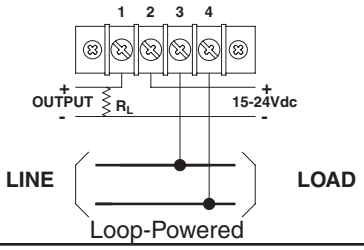

Loop-Powered

FLEX-CORE®
Div. Morlan & Associates, Inc.
4970 Scioto Darby Rd. Hilliard, Ohio 43026
WWW.FLEX-CORE.COM
sales@flex-core.com
PHONE (614) 889-6152
TECH. ASSISTANCE (614) 876-8308
FAX # (614) 876-8538

VOLTAGE TRANSDUCERS

AC VOLTAGE TRANSDUCER — MODEL 3AVT

THREE VOLTAGE TRANSDUCERS IN ONE ENCLOSURE

FEATURES

- Accurate, reliable voltage measurement.
- Three separate inputs, three outputs.
- 2200Vac input/output isolation.
- UL, CUL, CE Listed.

c UL us LISTED E167120

CE

INPUT	OPTIONAL OUTPUTS MODEL AVT-				
AC VOLTAGE	0-1mAdc*	4-20mAdc	4-20mAdc**	0-10Vdc*	0-5Vdc*
0-90	090A	090E	090E2	090C	090CX5
0-150	150A	150E	150E2	150C	150CX5
0-300	300A	300E	300E2	300C	300CX5
0-600	600A	600E	600E2	600C	600CX5

*Models are self-powered from measured voltage line.

** E2 loop-powered models require 15-24Vdc.

E (4-20mA) models require 115Vac instrument power.

Optional 230Vac instrument power - Add suffix "-22".

"E" models are not CE listed.

APPLICATIONS

- Designed for use in three phase applications which require inexpensive voltage measurement.
- 3AVT150 can be used with higher voltage potential transformers
- Line voltage monitoring.



ORDERING INFORMATION

Example: Three 0-120Vac Inputs with Three 0-1mA Outputs.
3AVT-150A

Transducer output is derived from the average absolute value of the input and calibrated as the RMS value of the sine wave input.

NOTE: For an output that represents the average of the three inputs: Add Suffix "Y05" (Formerly X668) (Not UL, CUL, or CE Listed)

SPECIFICATIONS

INPUT

Frequency Range 50/60Hz
Burden .....90V & 150V models..... 1VA
300V models 2VA
600V models 3VA
Overload ..... F.S. Rating
600V models 575V
Dielectric Test...(Input/Output/Case).....2200Vac
Instrument Power
Std. 4-20mA units .. 115Vac, 50/60Hz, ±15%, 10VA
"-22" Option" ..... 230Vac, 50/60Hz, ±15%, 10VA

OUTPUT

ACCURACY ..... ±0.25% F.S. @60Hz
Includes effects of linearity (10-100%) and setpoint.
Output Ripple..... < 1.0% F.S.
Response 400ms
Output Loading (Ohms)
1mA ..... A 0-10K
4-20mA..... E 0-1K
4-20mA..... E2 ..... (@24Vdc)...0-600
5V & 10V ..... C & CX5..... ≥ 10M
Field Adjustable Cal..... ± 5%
Temperature Effect .....± 1.0% Rdg.
Temperature Range.....-20°C to +60°C

CASE DIMENSIONS

Models A, C, CX5, & E2

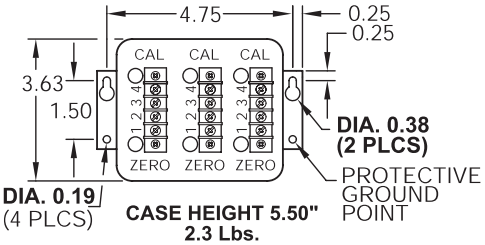

Model E

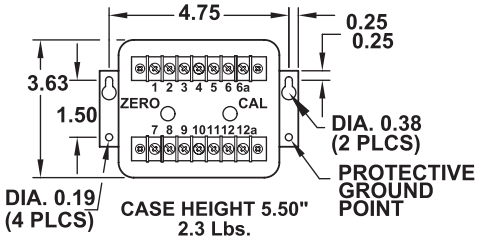

All Dimensions in Inches

CONNECTION DIAGRAMS

A, C, & CX5 Three-Phase, Three-Wire

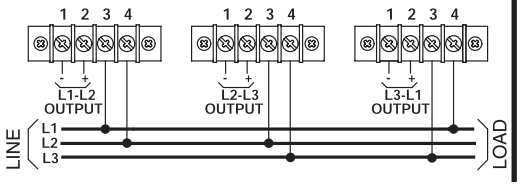

E2 Three-Phase, Three-Wire

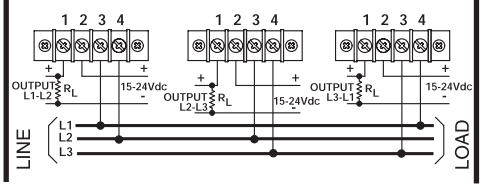

E Three-Phase, Three-Wire

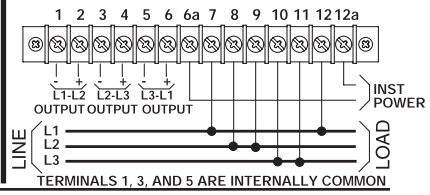

TERMINALS 1, 3, AND 5 ARE INTERNALLY COMMON

A, C, & CX5 Three-Phase, Four -Wire

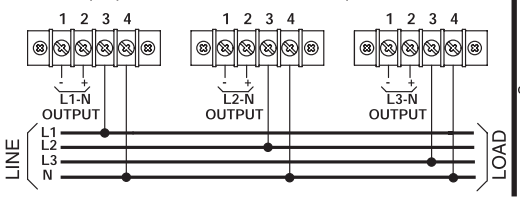

E2 Three-Phase, Four-Wire

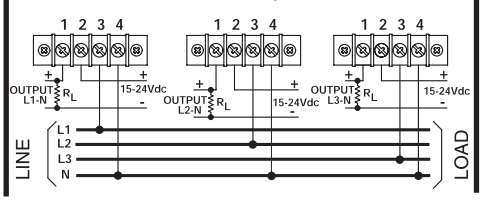

E Three-Phase, Four-Wire

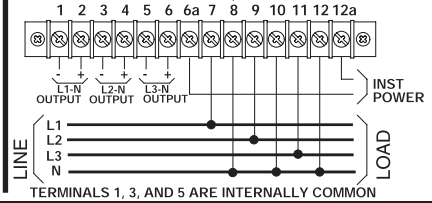

TERMINALS 1, 3, AND 5 ARE INTERNALLY COMMON

FLEX-CORE®
Div. Morlan & Associates, Inc.
4970 Scioto Darby Rd. Hilliard, Ohio 43026
WWW.FLEX-CORE.COM
sales@flex-core.com
PHONE (614) 889-6152
TECH. ASSISTANCE (614) 876-8308
FAX # (614) 876-8538

VOLTAGE TRANSDUCERS

RMS VOLTAGE TRANSDUCER — *MODEL* AVTR

ACCURATE TO 0.25% FULL SCALE

FEATURES

- Accurate measurement of the **true RMS** value of input signals over a frequency range of 48-420Hz.

INPUT	STANDARD OUTPUTS MODEL AVTR-			
AC VOLTS	0-1mAdc	4-20mAdc	0-10Vdc	0-5Vdc
0-150	001B	001E	001D	001X5
0-300	002B	002E	002D	002X5
0-600	004B	004E	004D	004X5

All std. units require 115Vac, ±15% instrument power, (50/60Hz).
Optional 230Vac instrument power-Add suffix **"-22"**.

APPLICATIONS

- For use in applications where measurement of non-sinusoidal waveforms is required.
- AVTR-001 series can be used with higher voltage potential transformers.

c UL us LISTED
E500652



ORDERING INFORMATION
Example:
Single Phase 120Vac Input with 0-10Vdc Output.
AVTR-001D

SPECIFICATIONS

INPUT

Voltage ..... See Table
Frequency Range ..... 48 to 420Hz
Burden ..... 150V ..... ≤ 0.15VA
300V ..... ≤ 0.30VA
600V ..... ≤ 0.6VA
Overload ..... 150V & 300V Model ..... F.S. Rating
600V Model 575V
Dielectric Test ..... (Input/Output/Case) 2200Vac
Instrument Power
Standard ..... 115Vac, ±15%, 50/60Hz, 3.5VA
-22 Option ..... 230Vac, ±15%, 50/60Hz, 3.5VA

OUTPUT

Output Ripple ..... <1.0% F.S.
Response (90%) 100ms
Output Loading (Ω)
0-1mAdc 0-10K
0-10Vdc ..... 2K min.
4-20mAdc 0-500
Field Adjustable Cal ..... ± 10%
ACCURACY ..... ± 0.25% F.S. (@ 60Hz)
Includes effects of linearity & set point.
Typical ..... ± 0.5% over entire frequency range
Temperature Effect ..... (-20°C to +60°C) ..... ± 1.0% Rdg.

CASE DIMENSIONS

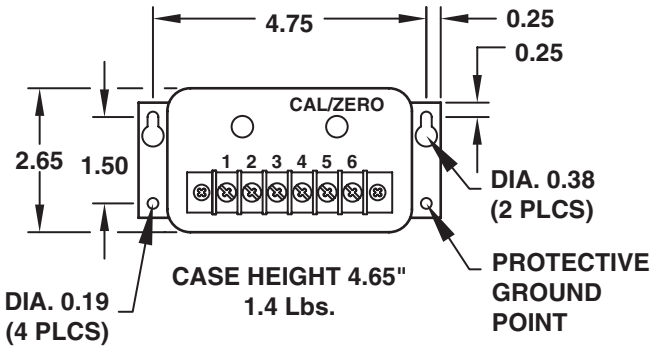

All Dimensions In Inches

CONNECTION DIAGRAM

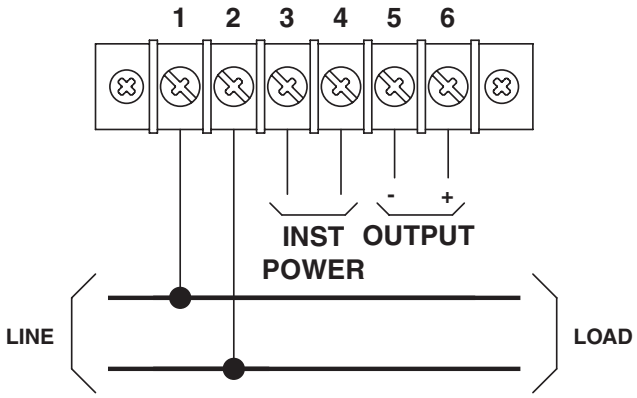

FLEX-CORE®
Div. Morlan & Associates, Inc.
4970 Scioto Darby Rd. Hilliard, Ohio 43026
WWW.FLEX-CORE.COM
sales@flex-core.com
PHONE (614) 889-6152
TECH. ASSISTANCE (614) 876-8308
FAX # (614) 876-8538

VOLTAGE TRANSDUCERS

3 IN 1 RMS VOLTAGE TRANSDUCER — *MODEL* 3VTR

THREE RMS VOLTAGE TRANSDUCERS IN ONE ENCLOSURE

FEATURES

- Accurate measurement of the **true RMS** value of input signals over a wide frequency range
- 2200Vac Input/output isolation.

INPUT	STANDARD OUTPUTS MODEL 3VTR-			
AC VOLTS	0-1mAdc	4-20mAdc	0-10Vdc	0-5Vdc
0-150	001B	001E	001D	001X5
0-300	002B	002E	002D	002X5
0-600	004B	004E	004D	004X5

APPLICATIONS

- For use when measurement of non-sinusoidal waveforms is required.
- Designed for use in three phase systems, but may also be used to monitor three single-phase circuits where panel space is limited.

ORDERING INFORMATION
Example: (3) 120Vac inputs with (3) 0-10Vdc outputs
3VTR-001D



SPECIFICATIONS

INPUT

Voltage ..... See Table
Frequency Range ..... 48 to 420Hz
Burden (Each Input) ..... 0.4VA @ F.S.
Overload ..... F.S. Rating
Dielectric Test .....(Input/Output/Case) 2200Vac
Instrument Power (Std.) 85-265Vac, 48-420Hz, 5VA
or 110-370Vdc, 5VA

OUTPUT

Output Ripple ..... < 1.0% F.S.
Response (90%) 100ms
Output Loading (Ω)
0-1mAdc 0-10K
0-5Vdc, 0-10Vdc ..... 2K min.
4-20mAdc 0-500
Field Adjustable Cal. ..... ± 10%
ACCURACY ..... **±0.25% F.S. @ 60Hz**
Includes effects of linearity and set point.
±0.5% F.S. Typical Over Frequency Range
Temperature Effect .....(-20°C to +60°C) ... ±1.0% Rdg.

CONNECTION DIAGRAMS

THREE-PHASE, THREE-WIRE

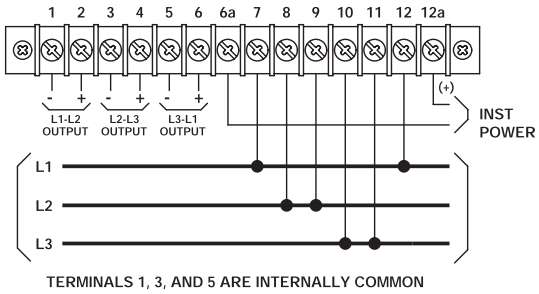

TERMINALS 1, 3, AND 5 ARE INTERNALLY COMMON

THREE-PHASE, FOUR-WIRE

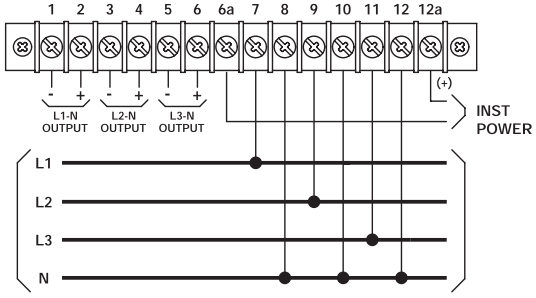

TERMINALS 1, 3, AND 5 ARE INTERNALLY COMMON

CASE DIMENSIONS

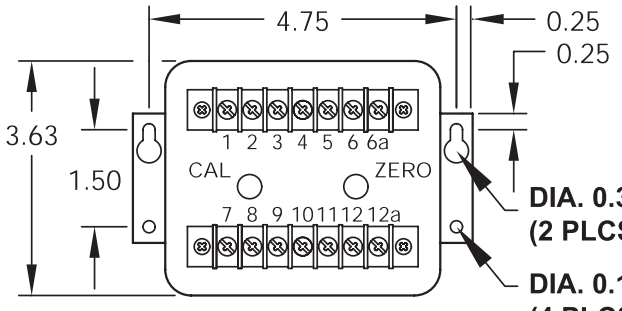

CASE HEIGHT 6.63"
2.5 Lbs.

All Dimensions In Inches

All units have universal power supply 85-265Vac, 48-420Hz or 110-370Vdc.

FLEX-CORE®
Div. Morlan & Associates, Inc.
4970 Scioto Darby Rd. Hilliard, Ohio 43026
WWW.FLEX-CORE.COM
sales@flex-core.com
PHONE (614) 889-6152
TECH. ASSISTANCE (614) 876-8308
FAX # (614) 876-8538

VOLTAGE TRANSDUCERS

RMS VOLTAGE TRANSDUCER — *MODEL* MVTR

2-WIRE LOOP POWERED, TRUE RMS

FEATURES

- Provides a fully-isolated 4-20mAdc output proportional to the measured voltage, even in non-sinusoidal waveforms
- Slim profile allows maximum use of control enclosure space
- Recessed terminals provide increased safety
- UL94V-0 polyamide DIN-mount case style

APPLICATIONS

- True RMS transducer for accurately sensing voltage in single and 3-phase installations
- Ideal for non sinusoidal applications
- Designed for industrial environments



Transducer output is derived from the RMS value of the input.
DIN-rail lengths available: Consult Factory

INPUT AC VOLTS	STANDARD OUTPUTS MODEL MVTR-
	4-20mAdc
0-150	150E2
0-300	300E2
*0-600	*600E2

*Note: 600Vac models supplied with potential transformer (PT)

SPECIFICATIONS

INPUT
Voltage ..... See Table
Frequency Range .... Standard 50-400Hz
Burden ..... 150Vac models 1.0VA
300Vac, 600Vac models 2.0VA
Voltage Overload ..... F.S. Rating

OUTPUT
Scaling ..... 0-F.S. Input = 4-20mAdc Output
Response (to 90%) ... 150V & 300 models 200ms
600V models 500ms
Loading ..... (@24Vdc. Instr. Pwr) 0-500Ω
Set point Adjustment ..... ±5%, minimum

DIELECTRIC TEST
Input/Output 2200Vac

INSTRUMENT POWER
Loop-powered ..... Nominal 24Vdc
Range 15-35Vdc

ACCURACY (Includes effects of linearity and setpoint)
60Hz ..... 10-100% F.S. ..... ±0.25% F.S.
All others ..... ±1.0% F.S.
Output Ripple ..... <1.0% pk-pk

TEMPERATURE
Operating Range ..... -20°C to +60°C
Effect ..... ±1.0% F.S.

PHYSICAL
Termination Wire Size ..... 22 to 12 AWG
Weight ..... 150Vac, 300Vac ..... 0.25 Lb.
600Vac models with PT ..... 0.90 Lb.
Unit can be mounted on ..... RAIL EN50035 (DIN 1) OR RAIL EN50022 (DIN 2)

CONNECTION DIAGRAMS

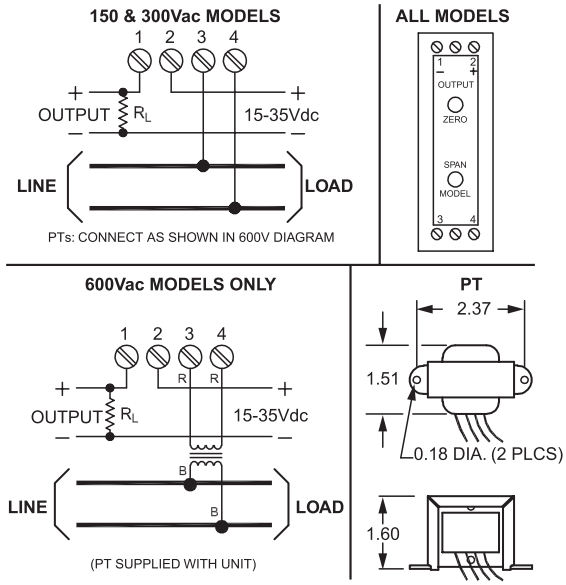

CASE DIMENSIONS

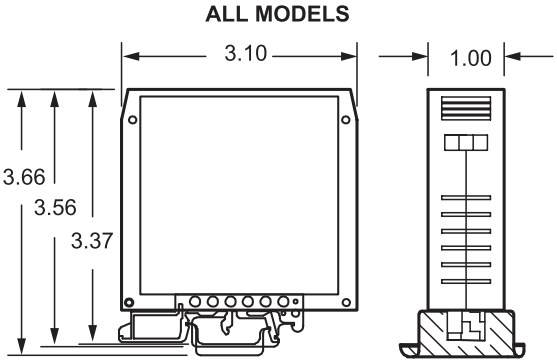

All Dimensions In Inches.

FLEX-CORE®
Div. Morlan & Associates, Inc.
4970 Scioto Darby Rd. Hilliard, Ohio 43026
WWW.FLEX-CORE.COM
sales@flex-core.com
PHONE (614) 889-6152
TECH. ASSISTANCE (614) 876-8308
FAX # (614) 876-8538

VOLTAGE TRANSDUCERS

DC or VARIABLE FREQUENCY VOLTAGE TRANSDUCER *MODELS* VT7, VT8

DC TO 10K HERTZ FREQUENCY RANGE

FEATURES

- VT7 Output is proportional to the input amplitude and frequency (ac in/ac out, dc in/dc out).
- VT8 Provides dc output which is proportional to RMS value of AC and/or dc input signal.
- Better than 10 kilohertz bandwidth.
- Input/output isolation of 2500V.

APPLICATIONS

- Monitoring of substation or electric circuit performance.
- Isolation and amplification of shunt output.
- Accurate measurement of voltage that may contain dc and non-sinusoidal AC components.
- Monitoring of RMS voltage. (VT8)

	*INPUT mV	STANDARD OUTPUTS MODEL VT7- OR VT8-			
		***1mA	4-20mA	***10V	***5V
*Shunt Rated	0-50*	015B	015E	015D	015X5
	0-100*	016B	016E	016D	016X5
	0-200*	017B	017E	017D	017X5
	0-250*	018B	018E	018D	018X5
	INPUT VOLTS	STANDARD OUTPUTS MODEL VT7- OR VT8-			
		***1mA	4-20mA	***10V	***5V
	0-10	001B	001E	001D	001X5
	0-25	002B	002E	002D	002X5
	0-50	003B	003E	003D	003X5
	0-100	004B	004E	004D	004X5
	0-150	005B	005E	005D	005X5
	0-250	006B	006E	006D	006X5
	0-300	007B	007E	007D	007X5
	0-400	008B	008E	008D	008X5
	0-500	009B	009E	009D	009X5
	0-600	010B	010E	010D	010X5
	0-700**	011B	011E	011D	011X5
	0-800**	012B	012E	012D	012X5
	0-900**	013B	013E	013D	013X5
	0-1000**	014B	014E	014D	014X5

*50,100,200 and 250mV models can be used for shunt isolation.
**Highlighted models will be supplied with an externally mounted divider module.
***NOTE: VT7 Models are Bi-Directional (Exept "E" output)
All units have universal power supply 85-265Vac, 48-420Hz or 110-370Vdc

Optional DC Instrument Power Available
-12, -15, -24, -37, -48 (150mA)

ORDERING INFORMATION

Example: 150Vdc Input with 4-20mA Output.
VT7-005E



CASE DIMENSIONS

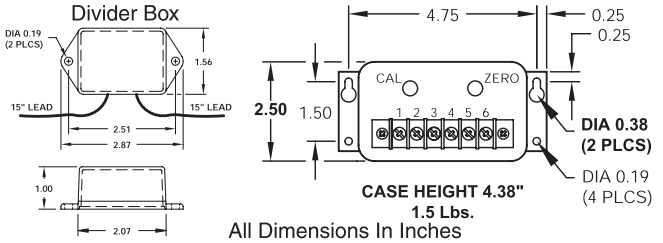

All Dimensions In Inches

CONNECTION DIAGRAMS

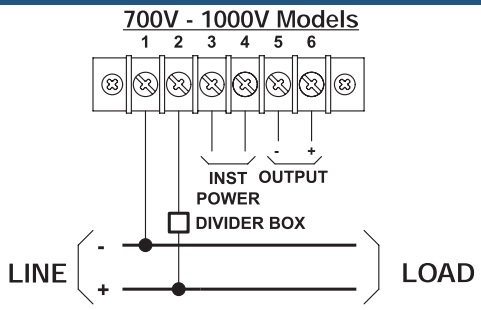

Note: All models above 600V input require a divider box in series with the input terminal #2. Do not connect the input voltage directly, damage to the transducer will result if not properly connected.

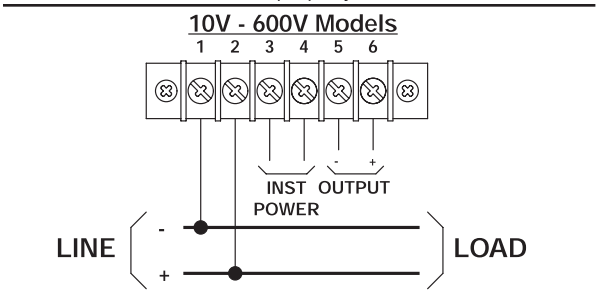

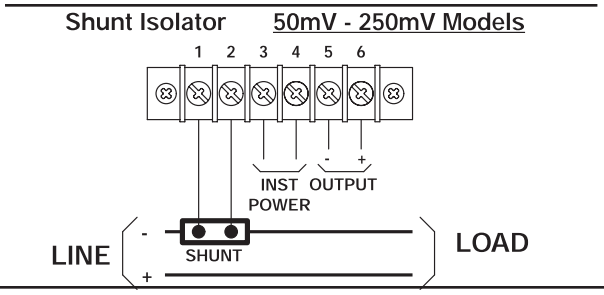

SPECIFICATIONS

INPUT

Voltage ..... See Table
Frequency Range dc-10kHz
Overload ... 0.05-600V ..... 2 X F.S. or 600Vac/850Vdc max.
700V-1000V(w/external multiplier box)...1.25 X F.S.
Burden (Ω) ..... > 100K
Dielectric Test.....(Direct Input/Output/Case) 2500Vac
Inst. Power.... 85-265Vac, 48-420Hz, 5VA or 110-370Vdc, 5VA
Temperature Effects...(-10°C to +60°C) ..... ± 1.0% Rdg.
Field Adjustable Cal..... ± 10%

OUTPUT

ACCURACY

Includes effects of linearity, setpoint and repeatability.
VT7 Models..... ± 0.25% F.S.@ DC
VT8 Models ..... ± 0.25% F.S.@ 48-420Hz
Response Time
VT7 Models.....(to 90%)..... 50µs
VT8 Models.....(to 90%).....100ms
Output Loading (Ω)
1mA 0-10K
10V, 5V ..... > 2K
4-20mA 0-500

FLEX-CORE®
Div. Morlan & Associates, Inc.
4970 Scioto Darby Rd. Hilliard, Ohio 43026
WWW.FLEX-CORE.COM
sales@flex-core.com
PHONE (614) 889-6152
TECH. ASSISTANCE (614) 876-8308
FAX # (614) 876-8538

VOLTAGE TRANSDUCERS

UNIDIRECTIONAL DC VOLTAGE TRANSDUCER — *MODEL* VTU

FEATURES

- Output is electrically isolated from the input and is directly proportional to the input.
- Unidirectional signals only.
- Provides 1500 Volt dielectric protections.

APPLICATIONS

- Monitoring of substation or electric circuit performance.
- Isolation and amplification of shunt output.
- Electric generator or solar field monitoring.

INPUT	STANDARD OUTPUTS MODEL VTU-		
DC VOLTS	0-1mAdc	4-20mAdc	0-5Vdc
0 - 0.05*	015B	015E	015X5
0 - 0.10*	016B	016E	016X5
0 - 10	001B	001E	001X5
0 - 25	002B	002E	002X5
0 - 50	003B	003E	003X5
0 - 100	004B	004E	004X5
0 - 150	005B	005E	005X5
0 - 250	006B	006E	006X5
0 - 300	007B	007E	007X5
0 - 400	008B	008E	008X5
0 - 500	009B	009E	009X5
0 - 600	010B	010E	010X5
0 - 700	011B	011E	011X5
0 - 800	012B	012E	012X5
0 - 900	013B	013E	013X5
0 - 1000	014B	014E	014X5

Highlighted models are supplied with an external divider module.
*50 and 100mV models can be used for shunt isolation.



ORDERING INFORMATION

Example: 150Vdc Input with a 4-20mAdc Output.
VTU-005E

SPECIFICATIONS

INPUT

Voltage ..... See Tables
Frequency Range ..... dc to 1000Hz
Burden (Ω)
50 & 100mVdc models ..... > 500
All other models ..... > 100K
Overload
0.05 - 600V ..... 2 X F.S. or 850Vdc max.
700 - 1000V ..... (w/external divider) ..... 1500Vdc max.
Dielectric Test .....(direct input/output/case)..... 1500Vac
Instrument Power ..... 115Vac, ±15%, 50/60Hz, 4VA
"22" Option ..... 230Vac, ±15%, 50/60Hz, 4VA

OUTPUT

ACCURACY .....±0.25% Rdg., ±1% F.S. @ DC
includes effects of linearity and repeatability
Response Time.... (to 90%) 500µs
Output Loading (Ω)
1mAdc 0-5K
5Vdc ..... 2K min.
4-20mAdc 0-300
Field Adjustable Cal. ..... ± 10%
Temp. Effect ..... (-5°C to +40°C) .....±1.0% Rdg., ±0.1% F.S.
Weight ..... 0.8 Lb.

CASE DIMENSIONS

DIVIDER BOX

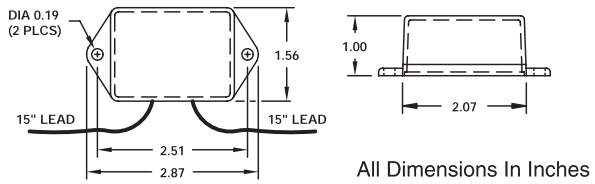

All Dimensions In Inches

MODEL VTU

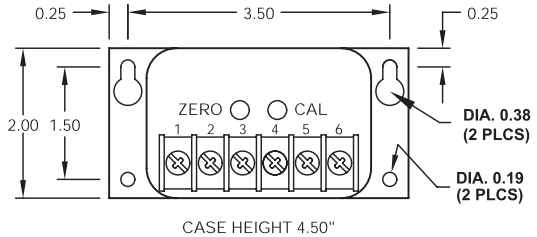

CASE HEIGHT 4.50"

CONNECTION DIAGRAMS

50mV-600V MODELS

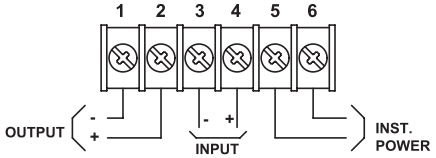

700V-1000V MODELS

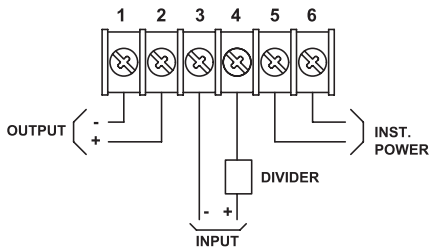

FLEX-CORE®
Div. Morlan & Associates, Inc.
4970 Scioto Darby Rd. Hilliard, Ohio 43026
WWW.FLEX-CORE.COM
sales@flex-core.com
PHONE (614) 889-6152
TECH. ASSISTANCE (614) 876-8308
FAX # (614) 876-8538

VOLTAGE TRANSDUCERS

UNIDIRECTIONAL DC HIGH VOLTAGE TRANSDUCER *MODEL* VTH

10KV DIELECTRIC TEST

FEATURES

- Output is electrically isolated from the input and is directly proportional to the input amplitude.
- Input/output dielectric test of 10kV.

APPLICATIONS

- Monitoring of substation or electric circuit performance.
- Isolation and amplification of shunt output.



INPUT	STANDARD OUTPUTS MODEL VTH-			
DC VOLTS	0-1mAdc	4-20mAdc	0-10Vdc	0-5Vdc
0-0.050 0-0.100	015B 016B	015E 016E	015D 016D	015X5 016X5
0-100 0-250 0-400	004B 006B 008B	004E 006E 008E	004D 006D 008D	004X5 006X5 008X5
0-1000 0-2500 0-4000	014B 020B 022B	014E 020E 022E	014D 020D 022D	014X5 020X5 022X5

ORDERING INFORMATION

Example: 1000Vdc Input with a 4-20mA Output.

VTH-014E

SPECIFICATIONS

INPUT

Voltage Range ..... See Table
Over Range w/o damage ..... 120% of Rating
Burden ..... ≤ 1mA
Dielectric Test ..... (input/output/case) 10kVac
(instr. power to output) 2200Vac
Instrument Power 115V, 50/60Hz, 3VA

INPUT LEADS

Wire size ..... 22 AWG
Length ..... Standard ..... 3'
Option "L" ..... 15'

OUTPUT (UNIDIRECTIONAL)

ACCURACY ..... ±0.5% F.S.
Response ..... (90%) 100ms
Loading ..... 1mAdc ..... ≤10K Ω
5Vdc, 10Vdc ..... ≥2K Ω
4-20mAdc ..... ≤500 Ω
Temp. Effect ..... (-10°C to +60°C) ..... ±1.0% Rdg., ±0.1% F.S.
Weight ..... 3.0 Lbs.

CASE DIMENSIONS

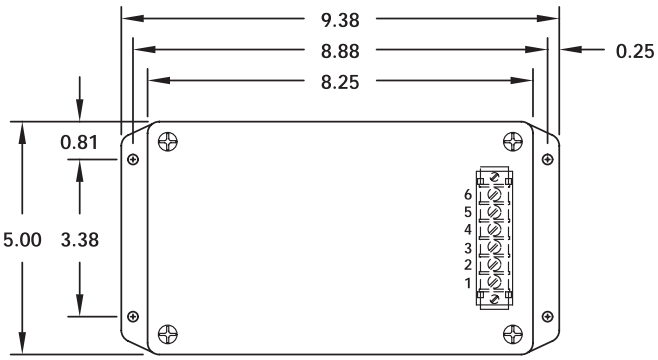

CASE HEIGHT 4.03"

All Dimensions In Inches

CONNECTION DIAGRAMS

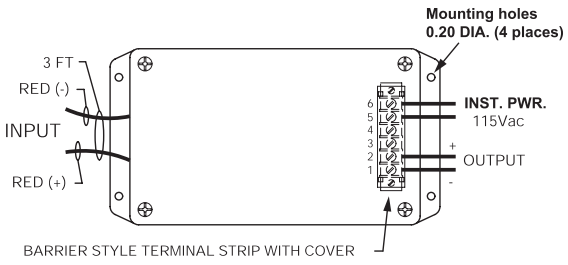

FLEX-CORE®
Div. Morlan & Associates, Inc.
4970 Scioto Darby Rd. Hilliard, Ohio 43026
WWW.FLEX-CORE.COM
sales@flex-core.com
PHONE (614) 889-6152
TECH. ASSISTANCE (614) 876-8308
FAX # (614) 876-8538

WATT TRANSDUCERS

DC TO 400HZ WATT TRANSDUCER — *MODEL* PC8

SINGLE PHASE DC TO 400 HERTZ

FEATURES

- Accurate from dc to 400Hz, factory calibration traceable to **NIST**.
- 1000Vac Input/output isolation.
- Real-time indication of power
- Transient response **less than 50 microseconds**.

APPLICATIONS

- Accurate monitoring of power that contains dc and non-sinusoidal AC components.
- Ideal for use in SCR and other AC or dc switching circuitry.
- Bi-directional output.



SINGLE PHASE VARIABLE FREQUENCY (ONE ELEMENT)

PC8 – ☐ – ☐ ☐

INPUT VOLTAGE		INPUT CURRENT		SENSOR SIZE	OUTPUT OPTIONS	
001	0-25V	08	0-5A	(INTERNAL)	B	0 - ±1mAdc
002	0-50V	01	0-100A	C	D	0 - ±10Vdc
003	0-150V	02	0-200A	D	E	4 - 20mAdc
004	0-300V	03	0-300A	D	EM	4 - 12 - 20mAdc
005	0-400V	04	0-400A	D	X5	0 - ±5Vdc
006	0-500V	05	0-600A	E		
007	0-600V	06	0-1000A	E		
		07	0-2000A	E		

Highlighted models, (5A), can be used with current transformers in 25 to 400Hz applications.
All units require 85-135Vac instrument power, (50-400Hz).
Full scale power (Watts) can be determined by the product of full scale input voltage and full scale input current.
OPTIONAL SPLIT CORE CURRENT SENSOR AVAILABLE WITH UNITS OF 100 AMPS OR GREATER-ADD SUFFIX "S". LOWER CURRENT RANGES AVAILABLE-CONSULT FACTORY

ORDERING INFORMATION
Example: 150V, 100A Input with Split Core Sensor and ± 5Vdc Output, Proportional to 0-15000 Watts
PC8-003-01X5S

MODEL PC8 SPECIFICATIONS

INPUT

Voltage ..... See Tables
Current ..... See Tables
Frequency Range ..... dc to 400Hz
Power Factor ..... Any
Response (Transient 90%) 50µs
Burden (Ohms)
  Voltage ..... Models under 50V ..... >100K
  Models over 50V ..... >1M
Overload
  Voltage ..... 2 X F.S. or 600Vac/850Vdc max.
  Current ..... Using internal sensor ..... 2 X F.S.
  Using sensors C, D, E ..... 50 X F.S.
Dielectric Test....(Input/Output/Case) 1000Vdc
Surge ..... Withstands IEEE SWC test

OUTPUT

ACCURACY ..... ± 1.0% F.S.
Includes combined effects of voltage, current, load and power factor
Output Ripple ..... < 1.0% F.S. @ 60Hz
Output Loading (Ω)
  ±1mAdc 0-10K
  4-20mAdc, 4-12-20mAdc 0-500
  ±5Vdc, ±10Vdc ..... ≥2K
Response Time....(90%) ..... < 500ms
Field Adjustable Cal. ..... ± 10%
Temperature Range ..... 0°C to +40°C
Temperature Effect ..... ±1.0% of Rdg., ±0.1% F.S. Output
Instrument Power 85-135Vac, 50-400Hz, 10VA
  "-22" Option ..... 230Vac, 50/60Hz, ±15%

FLEX-CORE®
Div. Morlan & Associates, Inc.
4970 Scioto Darby Rd. Hilliard, Ohio 43026
WWW.FLEX-CORE.COM
sales@flex-core.com
PHONE (614) 889-6152
TECH. ASSISTANCE (614) 876-8308
FAX # (614) 876-8538

WATT TRANSDUCERS

CONNECTION DIAGRAMS — *MODEL* PC8

CONNECTIONS

SINGLE-PHASE VARIABLE FREQUENCY (ONE ELEMENT)

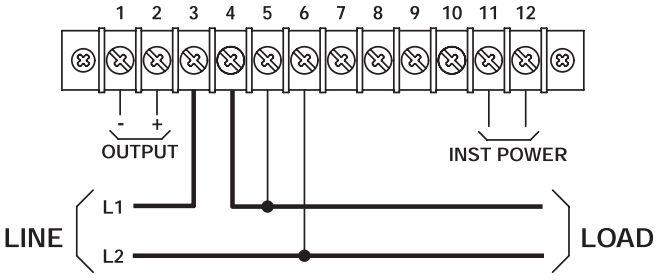

DIRECT CONNECTION USING INTERNAL SENSOR

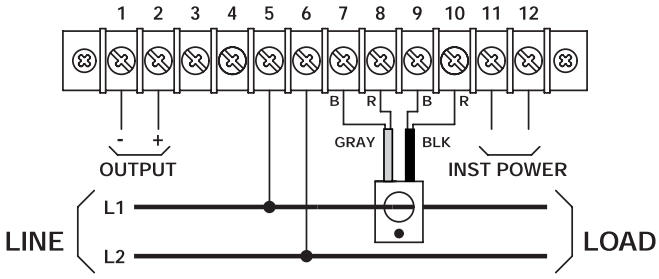

CONNECTION USING EXTERNAL SENSOR WITH TWO CABLES.

SENSOR CABLE SHIELD SHOULD BE CUT OFF.

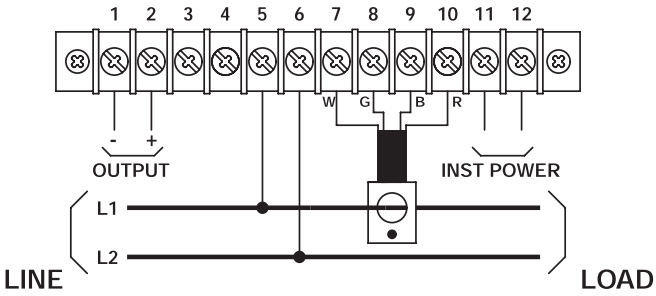

CONNECTION USING EXTERNAL SENSOR WITH ONE CABLE.

WARNING: SHOCK HAZARD
CURRENT SENSOR TERMINALS ARE AT LINE VOLTAGE.

CASE DIMENSIONS

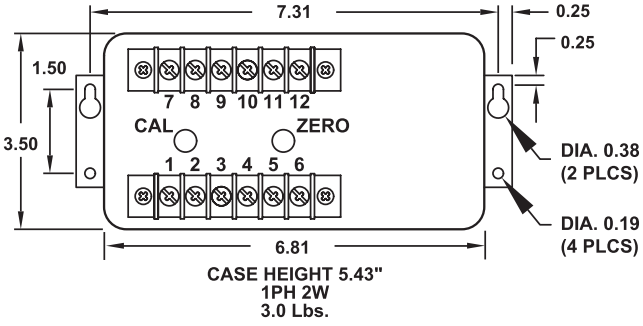

All Dimensions In Inches

SENSOR DIMENSIONS

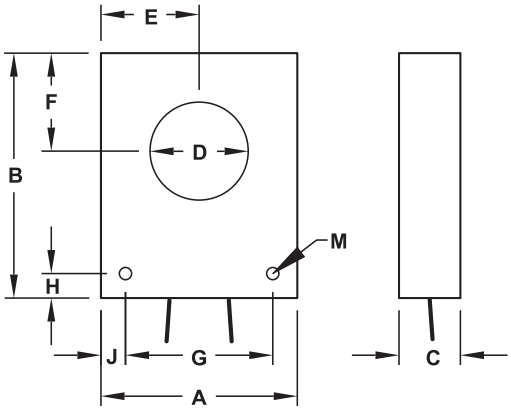

SENS. SIZE	SENSOR DIMENSIONS										WT. LBS.
	A	B	C	D	E	F	G	H	J	M	
C	2	2	3/4	3/4	1	7/8	1 1/2	1/4	1/4	5/32	0.28
D	3 1/8	4	3/4	1 1/8	1 9/16	1 1/2	2 1/8	1/2	1/2	11/64	0.75
E	4 1/8	5	1 1/4	2	2 1/16	2	3 1/4	7/16	7/16	17/64	2.80

All Dimensions in Inches

Solid core models are supplied with 18 inch cables on sensor sizes C & D. All other solid core models supplied with detachable 8 foot cable. Sensor size C split core models are supplied with 8 foot attached cable. All other split core models are supplied with detachable 8 foot cable. Longer cables are available.

FLEX-CORE®
Div. Morlan & Associates, Inc.
4970 Scioto Darby Rd. Hilliard, Ohio 43026
WWW.FLEX-CORE.COM
sales@flex-core.com
PHONE (614) 889-6152
TECH. ASSISTANCE (614) 876-8308
FAX # (614) 876-8538

WATT TRANSDUCERS

AC WATT TRANSDUCER — *MODELS* PC5, PC4

FEATURES

- Accurate regardless of variations in voltage, current, power factor, or load.
- Output is proportional to true power delivered to a load; P=EI(COS ø). Provides bi-directional operation.



APPLICATIONS

- Equipment power consumption.
- For use with SCR controls, chopped waveforms, or where harmonic components exist.
- Standard outputs provide signal for interface with meters, recorders, or data acquisition equipment.

(PC5) SINGLE PHASE, TWO WIRE 50/60 HERTZ (ONE ELEMENT)
(PC4) SINGLE PHASE, TWO WIRE 400 HERTZ (ONE ELEMENT)

INPUTS		F.S. (WATTS)	STANDARD OUTPUTS MODEL PC5- OR PC4-									
AC VOLTS	AC AMPS		0-1mA*	0-1mA	0-10Vdc*	0-10Vdc	4-20mA	4-12-20mA	4-20mA*	4-20mA**	0-5Vdc*	0-5Vdc
0-150	0 - 1	100	103A	103B	103C	103D	103E	103EM	103EY30	103E2	103CX5	103X5
	0 - 2.5	250	106A	106B	106C	106D	106E	106EM	106EY30	106E2	106CX5	106X5
	0 - 5	500	001A	001B	001C	001D	001E	001EM	001EY30	001E2	001CX5	001X5
	0 - 10	1K	010A	010B	010C	010D	010E	010EM	010EY30	010E2	010CX5	010X5
	0 - 15	1.5K	019A	019B	019C	019D	019E	019EM	019EY30	019E2	019CX5	019X5
	0 - 20	2K	117A	117B	117C	117D	117E	117EM	117EY30	117E2	117CX5	117X5
	0 - 25	2.5K	118A	118B	118C	118D	118E	118EM	118EY30	118E2	118CX5	118X5
0-300	0 - 1	200	104A	104B	104C	104D	104E	104EM	104EY30	104E2	104CX5	104X5
	0 - 2.5	500	107A	107B	107C	107D	107E	107EM	107EY30	107E2	107CX5	107X5
	0 - 5	1K	002A	002B	002C	002D	002E	002EM	002EY30	002E2	002CX5	002X5
	0 - 10	2K	011A	011B	011C	011D	011E	011EM	011EY30	011E2	011CX5	011X5
	0 - 15	3K	020A	020B	020C	020D	020E	020EM	020EY30	020E2	020CX5	020X5
	0 - 20	4K	110A	110B	110C	110D	110E	110EM	110EY30	110E2	110CX5	110X5
	0 - 25	5K	119A	119B	119C	119D	119E	119EM	119EY30	119E2	119CX5	119X5
0-600	0 - 1	500	105A	105B	105C	105D	105E	105EM	105EY30	105E2	105CX5	105X5
	0 - 2.5	1K	108A	108B	108C	108D	108E	108EM	108EY30	108E2	108CX5	108X5
	0 - 5	2K	003A	003B	003C	003D	003E	003EM	003EY30	003E2	003CX5	003X5
	0 - 10	4K	012A	012B	012C	012D	012E	012EM	012EY30	012E2	012CX5	012X5
	0 - 15	6K	021A	021B	021C	021D	021E	021EM	021EY30	021E2	021CX5	021X5
	0 - 20	8K	111A	111B	111C	111D	111E	111EM	111EY30	111E2	111CX5	111X5

Highlighted models, (5A), can be used with current transformers.
*Denotes self-powered unit, limiting input voltage ranges to:
85-135 for 150V models
200-280 for 300V models
380-550 for 600V models
**Denotes 4-20mA loop-powered unit, (15-40Vdc).
"E" and "EM" Option model requires 105-135Vac,50-400Hz,5VA inst. power.
All others require 85-135Vac instrument power, (50-400Hz).
Optional 230Vac instrument power - Add suffix "**-22**".

400 HERTZ MODELS-To order for use on 400Hz application, substitute "**PC4-**" in part number.

ORDERING INFORMATION
Example: Self-Powered, Single Phase, 120V, 5A Input with 0-5Vdc Output, Proportional to 0-500 Watts.
PC5-001CX5

NOTE:
"E", "E2", and "EY30" Models are unidirectional only. Reverse power conditions may cause the output to drop below 4mA but not below 0mA.

	FULL SCALE OUTPUT USING CURRENT TRANSFORMERS/ PC5 AND PC4 WATT TRANSDUCER			FULL SCALE OUTPUT USING CURRENT AND POTENTIAL TRANSFORMERS/ PC5 AND PC4 WATT TRANSDUCER			
MODEL NO. (example) PC5	F.S. WATTS FROM ABOVE	CURRENT TRANSFORMER RATIO (EXAMPLE)	FULL SCALE WATTS	F.S. WATTS FROM ABOVE	CURRENT TRANSFORMER RATIO (EXAMPLE)	POTENTIAL TRANSFORMER RATIO (EXAMPLE)	FULL SCALE WATTS
-001	500	500/5 (100:1)	50,000	500	500/5 (100:1)	2400/120 (20:1)	1,000,000
-002	1000	500/5 (100:1)	100,000				
-003	2000	500/5 (100:1)	200,000				

Add suffix "**Y25**" for use on zero-crossing SCR controllers. NOTE: This option is not available for self-powered models

FLEX-CORE®
Div. Morlan & Associates, Inc.
4970 Scioto Darby Rd. Hilliard, Ohio 43026
WWW.FLEX-CORE.COM
sales@flex-core.com
PHONE (614) 889-6152
TECH. ASSISTANCE (614) 876-8308
FAX # (614) 876-8538

WATT TRANSDUCERS

AC WATT TRANSDUCER — *MODELS* PC5, PC4



(PC5) THREE PHASE, THREE WIRE 50/60 HERTZ (TWO ELEMENT)
(PC4) THREE PHASE, THREE WIRE 400 HERTZ (TWO ELEMENT)

INPUTS		F.S. (WATTS)	STANDARD OUTPUTS MODEL PC5- OR PC4-									
AC VOLTS	AC AMPS		0-1mA*	0-1mA	0-10Vdc*	0-10Vdc	4-20mA	4-12-20mA	4-20mA*	4-20mA**	0-5Vdc*	0-5Vdc
0-150	0 - 1	200	120A	120B	120C	120D	120E	120EM	120EY30	120E2	120CX5	120X5
	0 - 5	1K	004A	004B	004C	004D	004E	004EM	004EY30	004E2	004CX5	004X5
	0 - 10	2K	013A	013B	013C	013D	013E	013EM	013EY30	013E2	013CX5	013X5
	0 - 15	3K	022A	022B	022C	022D	022E	022EM	022EY30	022E2	022CX5	022X5
	0 - 20	4K	112A	112B	112C	112D	112E	112EM	112EY30	112E2	112CX5	112X5
	0 - 25	5K	123A	123B	123C	123D	123E	123EM	123EY30	123E2	123CX5	123X5
0-300	0 - 1	400	121A	121B	121C	121D	121E	121EM	121EY30	121E2	121CX5	121X5
	0 - 5	2K	005A	005B	005C	005D	005E	005EM	005EY30	005E2	005CX5	005X5
	0 - 10	4K	014A	014B	014C	014D	014E	014EM	014EY30	014E2	014CX5	014X5
	0 - 15	6K	023A	023B	023C	023D	023E	023EM	023EY30	023E2	023CX5	023X5
	0 - 20	8K	113A	113B	113C	113D	113E	113EM	113EY30	113E2	113CX5	113X5
	0 - 25	10K	124A	124B	124C	124D	124E	124EM	124EY30	124E2	124CX5	124X5
0-600	0 - 1	800	122A	122B	122C	122D	122E	122EM	122EY30	122E2	122CX5	122X5
	0 - 5	4K	006A	006B	006C	006D	006E	006EM	006EY30	006E2	006CX5	006X5
	0 - 10	8K	015A	015B	015C	015D	015E	015EM	015EY30	015E2	015CX5	015X5
	0 - 15	12K	024A	024B	024C	024D	024E	024EM	024EY30	024E2	024CX5	024X5
	0 - 20	16K	114A	114B	114C	114D	114E	114EM	114EY30	114E2	114CX5	114X5

Highlighted models, (5A), can be used with Current transformers.
150 volt models may be used with single phase, three wire 120/240Vac Edison systems.
Optional 230Vac instrument power - Add suffix **"-22"**.

NOTE: "E", "E2", and "EY30" Models are unidirectional only. Reverse power conditions may cause the output to drop below 4mA but not below 0mA.

*Denotes self-powered unit, limiting input voltage ranges to:
85-135 for 150V models
200-280 for 300V models
380-550 for 600V models

**Denotes 4-20mA loop-powered unit (15-40Vdc).
"E" and "EM" Option model requires 105-135Vac, 50-400Hz, 5VA inst. power.
All others require 85-135Vac instrument power (50-400Hz)

MODEL PC5/PC4 SPECIFICATIONS

INPUT

Voltage ..... See Table
Current ..... See Table
Frequency Range ..... PC5 ..... 48 to 70Hz
PC4 ..... 400Hz
Power Factor ..... Any
Response (Transient 90%) ..... < 100µs
Burden
Voltage and Current 1.25VA/Phase
Output amplifier ..... 2 Watts
Current Overload
Continuous ..... 1-10A ..... 2 X F.S.
15A, 20A, and 25A ..... F.S.
Transient ..... 6 X F.S. (10 sec.)
Dielectric Test....(Input/Output/Case) ..... 1500Vac (RMS)
Surge ..... Withstands IEEE SWC test

OUTPUT

ACCURACY ..... ± 0.5% F.S.
Includes combined effects of power factor, linearity, repeatability and current sensor.
Output Ripple ..... <1% F.S.
Output Loading (Ω)
0-1mA 0-10K
0-10Vdc ..... 2K min.
4-20mA (E) 0-1500
4-20mA (E2) ..... (@24Vdc) 0-600
(@40Vdc) 0-1400
0-5Vdc ..... 2K min.
***Response Time....(90%) 250ms
Suffix **"Y25"** (for use on zero-crossing SCR controllers) ...5s
Note: This option is not available on self-powered models.
Field Adjustable Cal. ..... ± 10%
Temperature Range ..... -10°C to +60°C
Temperature Effect ..... ±1.0% of Rdg, ±0.1% F.S. output
Instrument Power 85-135Vac, 50-400Hz, 5VA
"E" & "EM" Option 105-135Vac, 50-400Hz, 5VA
"-22" Option ..... 230Vac, 50/60Hz, ±10%

	FULL SCALE OUTPUT USING CURRENT TRANSFORMERS/ PC5 AND PC4 WATT TRANSDUCER			FULL SCALE OUTPUT USING CURRENT AND POTENTIAL TRANSFORMERS/ PC5 AND PC4 WATT TRANSDUCER			
MODEL NO. (example) PC5	F.S WATTS FROM ABOVE	CURRENT TRANSFORMER RATIO (EXAMPLE)	FULL SCALE WATTS	F.S. WATTS FROM ABOVE	CURRENT TRANSFORMER RATIO (EXAMPLE)	POTENTIAL TRANSFORMER RATIO (EXAMPLE)	FULL SCALE WATTS
-004	1K	1000/5 (200:1)	200K	1K	1000/5 (200:1)	4200/120 (35:1)	7000K
-005	2K	1000/5 (200:1)	400K				
-006	4K	1000/5 (200:1)	800K				

Add suffix **"Y25"** for use on zero-crossing SCR controllers. NOTE: This option is not available for self-powered models

FLEX-CORE®
Div. Morlan & Associates, Inc.
4970 Scioto Darby Rd. Hilliard, Ohio 43026
WWW.FLEX-CORE.COM
sales@flex-core.com
PHONE (614) 889-6152
TECH. ASSISTANCE (614) 876-8308
FAX # (614) 876-8538

WATT TRANSDUCERS

AC WATT TRANSDUCER — *MODELS* PC5, PC4



(PC5) THREE PHASE, FOUR WIRE 50/60 HERTZ (THREE ELEMENT)
(PC4) THREE PHASE, FOUR WIRE 400 HERTZ (THREE ELEMENT)

INPUTS		F.S. IN (WATTS)	STANDARD OUTPUTS MODEL PC5- or PC4-									
AC VOLTS	AC AMPS		0-1mA*	0-1mA	0-10Vdc*	0-10Vdc	4-20mA	4-12-20mA	4-20mA*	4-20mA**	0-5Vdc*	0-5Vdc
0-150 L-N	0-1	300	125A	125B	125C	125D	125E	125EM	125EY30	125E2	125CX5	125X5
	0-5	1.5K	007A	007B	007C	007D	007E	007EM	007EY30	007E2	007CX5	007X5
	0-5 †	1.5K	7.5A	7.5B	7.5C	7.5D	7.5E	7.5EM	7.5EY30	7.5E2	7.5CX5	7.5X5
	0-10	3K	016A	016B	016C	016D	016E	016EM	016EY30	016E2	016CX5	016X5
	0-15	4.5K	025A	025B	025C	025D	025E	025EM	025EY30	025E2	025CX5	025X5
	0-20	6K	115A	115B	115C	115D	115E	115EM	115EY30	115E2	115CX5	115X5
	0-25	7.5K	127A	127B	127C	127D	127E	127EM	127EY30	127E2	127CX5	127X5
0-300 L-N	0-1	600	126A	126B	126C	126D	126E	126EM	126EY30	126E2	126CX5	126X5
	0-5	3K	008A	008B	008C	008D	008E	008EM	008EY30	008E2	008CX5	008X5
	0-5 †	3K	8.5A	8.5B	8.5C	8.5D	8.5E	8.5EM	8.5EY30	8.5E2	8.5CX5	8.5X5
	0-10	6K	017A	017B	017C	017D	017E	017EM	017EY30	017E2	017CX5	017X5
	0-15	9K	026A	026B	026C	026D	026E	026EM	026EY30	026E2	026CX5	026X5
	0-20	12K	116A	116B	116C	116D	116E	116EM	116EY30	116E2	116CX5	116X5
	0-25	15K	128A	128B	128C	128D	128E	128EM	128EY30	128E2	128CX5	128X5

Highlighted models, (5A), can be used with current transformers.
Voltage specifications are **line-to-neutral voltage**.
*Denotes self-powered unit, limiting input voltage ranges to:
85-135V for 150V models
200-280V for 300V models
380-550 fVor 600V models
**4-20mA loop-powered unit (15-40Vdc).
"E" and "EM" Option model requires 105-135Vac, 50-400Hz, 5VA inst. power.
All others require 85-135Vac instrument power, (50-400Hz).
Optional 230Vac instrument power - Add suffix **"-22"**
Add suffix **"Y25"** for use on zero-crossing SCR controllers.
NOTE: This option is not available for self-powered models

400 HERTZ MODELS-To order for use on 400Hz application, substitute **"PC4"** in part number.
† 2.5 Element

ORDERING INFORMATION
Example: Self-Powered, Three Phase-Four Wire, 120V, 5A Input with 0-5Vdc Output, Proportional to 0-1500 Watts.
PC5-007CX5

NOTE:
"E" , "E2" , and "EY30" Models are unidirectional only. Reverse power conditions may cause the output to drop below 4mA but not below 0mA.

FULL SCALE OUTPUT USING CURRENT TRANSFORMERS/PC5/PC4 WATT TRANSDUCER			
MODEL NO. (EXAMPLE) PC5	F.S. WATTS FROM ABOVE	CURRENT TRANSFORMER RATIO (EXAMPLE)	FULL SCALE WATTS
-007	1.5K	300/5 (60:1)	90K
-7.5	1.5K	300/5 (60:1)	90K
-008	3K	300/5 (60:1)	180K
-8.5	3K	300/5 (60:1)	180K

FULL SCALE OUTPUT USING CURRENT AND POTENTIAL TRANSFORMERS/PC5/PC4 WATT TRANSDUCER			
F.S. WATTS FROM ABOVE	CURRENT TRANSFORMER RATIO (EXAMPLE)	POTENTIAL TRANSFORMER RATIO (EXAMPLE)	FULL SCALE WATTS
1.5K	300/5 (60:1)	2400/120 (20:1)	1800K
1.5K	300/5 (60:1)	2400/120 (20:1)	1800K

CASE DIMENSIONS

SINGLE-PHASE & THREE-PHASE, THREE-WIRE
(Except three-phase, three-wire models with "E" , "EM" , and "EY30" option)

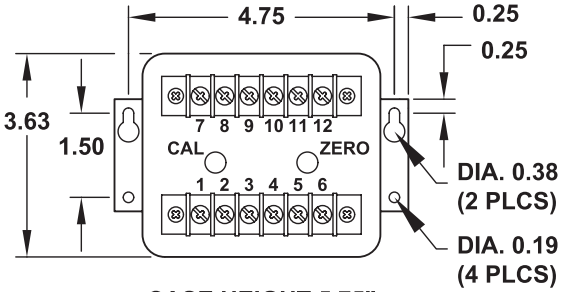

CASE HEIGHT 5.75"
1PH 2.2 Lbs.
3PH 3.7 Lbs.

THREE-PHASE, FOUR-WIRE
(Also used on three-phase, three-wire models with "E" , "EM" , and "EY30" option)

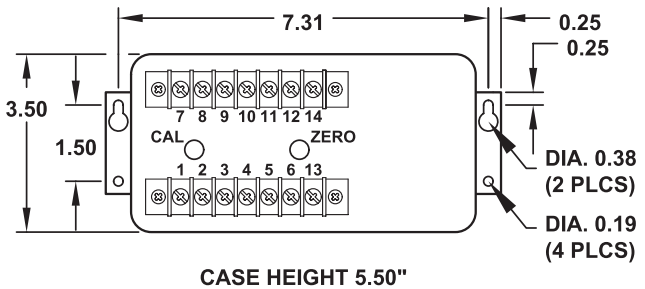

CASE HEIGHT 5.50"
3PH 3W 3.7 Lbs.
3PH 4W 4.2 Lbs.

All Dimensions In Inches

FLEX-CORE®
Div. Morlan & Associates, Inc.
4970 Scioto Darby Rd. Hilliard, Ohio 43026
WWW.FLEX-CORE.COM
sales@flex-core.com
PHONE (614) 889-6152
TECH. ASSISTANCE (614) 876-8308
FAX # (614) 876-8538

WATT TRANSDUCERS

CONNECTION DIAGRAMS — *MODELS* PC5, PC4

SINGLE-PHASE, TWO-WIRE CONNECTIONS (ONE ELEMENT)

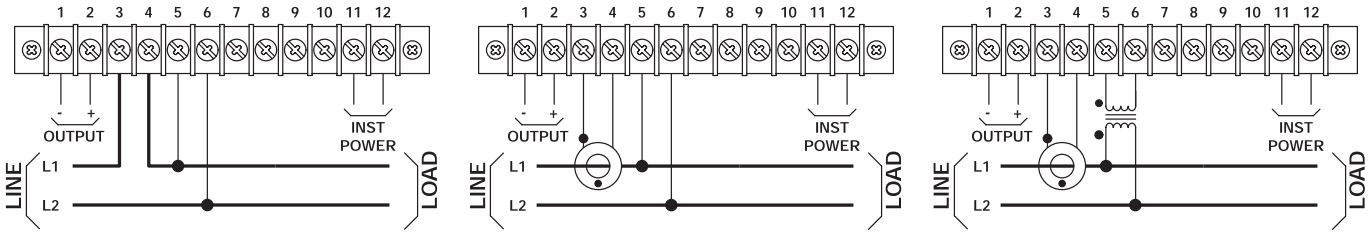

USING INTERNAL SENSOR — USING CURRENT TRANSFORMERS — USING CURRENT TRANSFORMERS AND POTENTIAL TRANSFORMERS

THREE-PHASE, THREE-WIRE CONNECTIONS (TWO ELEMENT)

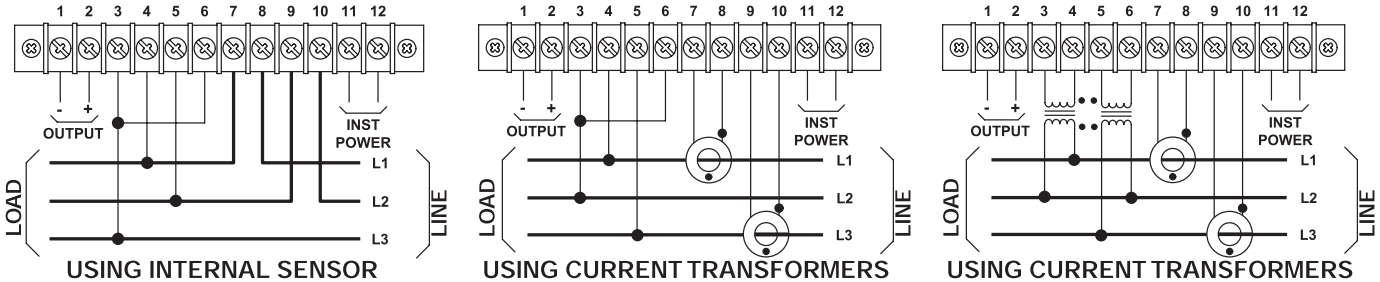

USING INTERNAL SENSOR — USING CURRENT TRANSFORMERS — USING CURRENT TRANSFORMERS AND POTENTIAL TRANSFORMERS

THREE-PHASE, FOUR-WIRE CONNECTIONS (2 1/2 ELEMENT)

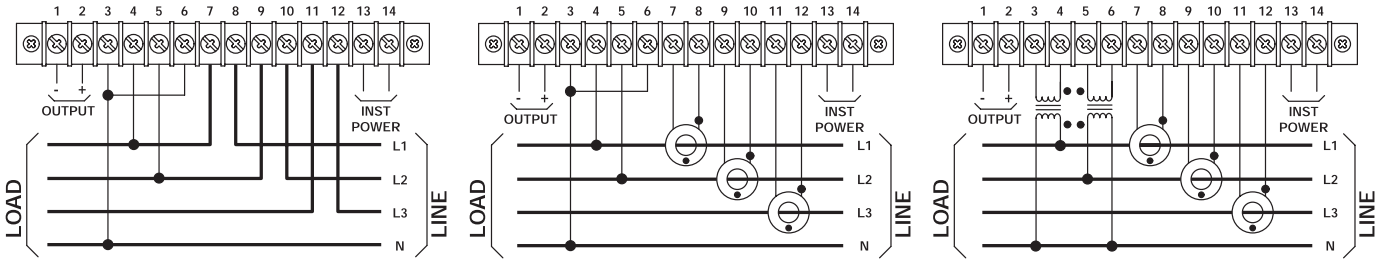

USING INTERNAL SENSOR — USING CURRENT TRANSFORMERS — USING CURRENT TRANSFORMERS AND POTENTIAL TRANSFORMERS

THREE-PHASE, FOUR-WIRE CONNECTIONS (THREE ELEMENT)

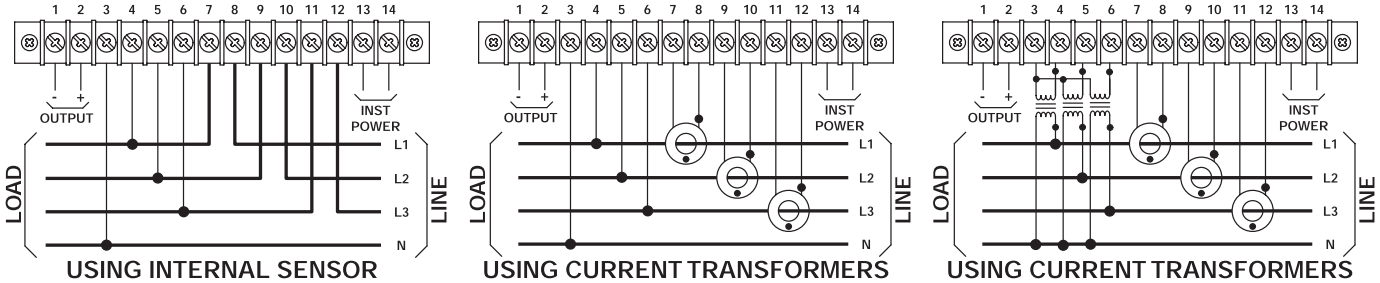

USING INTERNAL SENSOR — USING CURRENT TRANSFORMERS — USING CURRENT TRANSFORMERS AND POTENTIAL TRANSFORMERS

EDISON CIRCUIT 1 PHASE-THREE-WIRE (120/240) CONNECTIONS

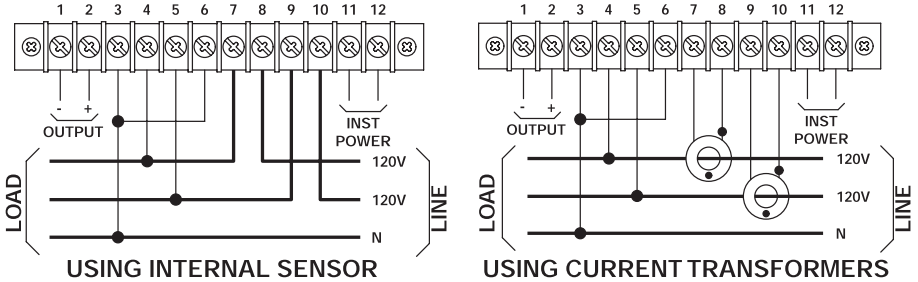

USING INTERNAL SENSOR (≤ 20 AMP) — USING CURRENT TRANSFORMERS (> 20 AMP)

OUTPUT CONNECTIONS

A, B, C, D, E, EM, EY30, X5, CX5
0-5V, 10V, 1mA, 4-20mA

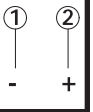

E2
4-20mAdc Loop- Powered

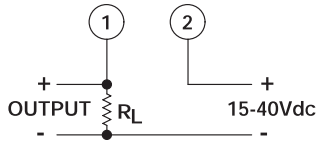

FLEX-CORE®
Div. Morlan & Associates, Inc.
4970 Scioto Darby Rd. Hilliard, Ohio 43026

WWW.FLEX-CORE.COM
sales@flex-core.com

PHONE (614) 889-6152
TECH. ASSISTANCE (614) 876-8308
FAX # (614) 876-8538

WATT TRANSDUCERS

PRECISION AC WATT TRANSDUCER — *MODEL* AGW

UL LISTED, ACCURATE TO 0.2% OF READING

FEATURES

- Accurate regardless of variations in voltage, current, power factor, or load.
- Available with 1, 2, 2 1/2, or 3 element configurations. Provides bi-directional operation.*
- Accuracy maintained over wide temperature range, calibration traceable to **NIST**.

LISTED 87X9
Energy Management
Equipment Accessory

APPLICATIONS

- Equipment monitoring for process control.
- Integration into energy management systems, or a variety of sub-metering applications.
- Measurement using direct-connection, current and/or potential transformers.

c UL us
LISTED
E500653



INPUT		F.S. WATTS	PHASE	NO. OF ELEMENTS	STANDARD OUTPUTS MODEL AGW-		
AC VOLTS	AC AMPS				±1mAdc	±10Vdc	4-20mAdc*
0-150	0-5	500	1P-2W	1	001B	001D	001E
0-300	0-5	1000	1P-2W	1	002B	002D	002E
0-600	0-5	2000	1P-2W	1	003B	003D	003E
0-150	0-5	1000	3P-3W	2	004B	004D	004E
0-300	0-5	2000	3P-3W	2	005B	005D	005E
0-600	0-5	4000	3P-3W	2	006B	006D	006E
0-150 L-N	0-5	1500	3P-4W	3	007B	007D	007E
0-300 L-N	0-5	3000	3P-4W	3	008B	008D	008E
0-150 L-N	0-5	1500	3P-4W	2 1/2	007.5B	007.5D	007.5E
0-300 L-N	0-5	3000	3P-4W	2 1/2	008.5B	008.5D	008.5E

To calculate full scale Watts when using potential and/or current transformers:
a = initial transducer calibration (from table above in F.S. Watts column)
b = current transformer ratio (e.g. 100:5, or 20)
c = potential transformer ratio (e.g. 600:120, or 5)
F.S. WATTS = a x b x c
NOTE: UL recognized current transformers available from factory
***"E" option is not bidirectional**

ORDERING INFORMATION
Example: 120V, 5A, Three-Phase, Three-Wire Input, ±10Vdc, Output Proportional to ± 1000 Watts
AGW-004D

SPECIFICATIONS

INPUT

Voltage ..... See Table
Current 0-5Aac
Frequency Range 58-62Hz
Power Factor ..... Any
Burden
  Voltage ..... < 0.1VA
  Current ..... < 0.25VA
Overload
  Voltage ..... (cont.) ..... 150Vac Range 175Vac
  300Vac Range 350Vac
  600Vac Range 600Vac
  Current ..... (cont.) ..... 2 X F.S.
  (transient) ..... 50Aac ..... (10 sec./hr.)
  250Aac ..... (1 sec./hr.)
Dielectric Test .... Input/Output/Case ..... (150V & 300V) ... 1800Vac
  (600V) 2200Vac
Surge ..... Withstands IEEE SWC test

OUTPUT

Output Ripple ..... <0.5% F.S.
Output Loading (Ω)
  0-1mAdc 0-10K
  0-10Vdc ..... 2K min.
  4-20mAdc 0-500
Response Time ..... (99%) ..... < 400ms
Field Adjustable Cal. ..... ± 2% min.
ACCURACY ..... ±0.2% Rdg./PF .. ± 0.04% F.S.
Includes combined effects of voltage, current, load and power factor.
Temperature Effect ..... (-20°C to +60°C) ..... ±0.005%/C
Operating Humidity ..... 0-95% non-condensing
Instrument Power ..... (Std.) 85-135Vac, 60Hz, 7VA
Weight ..... 3.3 Lbs.

FLEX-CORE®
Div. Morlan & Associates, Inc.
4970 Scioto Darby Rd. Hilliard, Ohio 43026
WWW.FLEX-CORE.COM
sales@flex-core.com
PHONE (614) 889-6152
TECH. ASSISTANCE (614) 876-8308
FAX # (614) 876-8538

WATT TRANSDUCERS

CONNECTION DIAGRAMS/DIMENSIONS — *MODEL* AGW

SINGLE-PHASE CONNECTIONS (ONE ELEMENT)

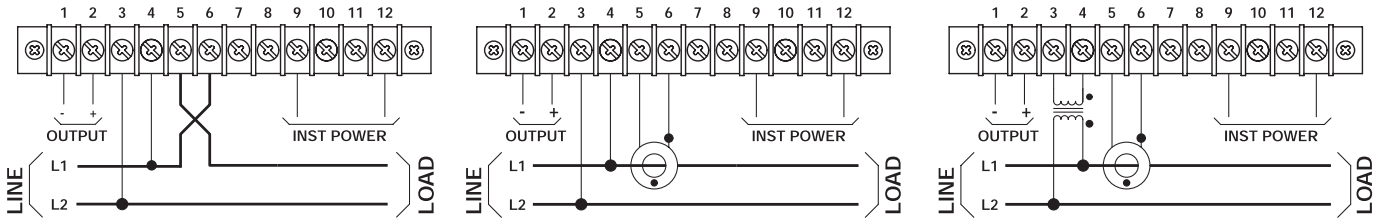

DIRECT CONNECTION | USING ONLY CURRENT TRANSFORMERS | USING POTENTIAL AND CURRENT TRANSFORMERS

THREE-PHASE, THREE-WIRE CONNECTIONS (2 ELEMENT)

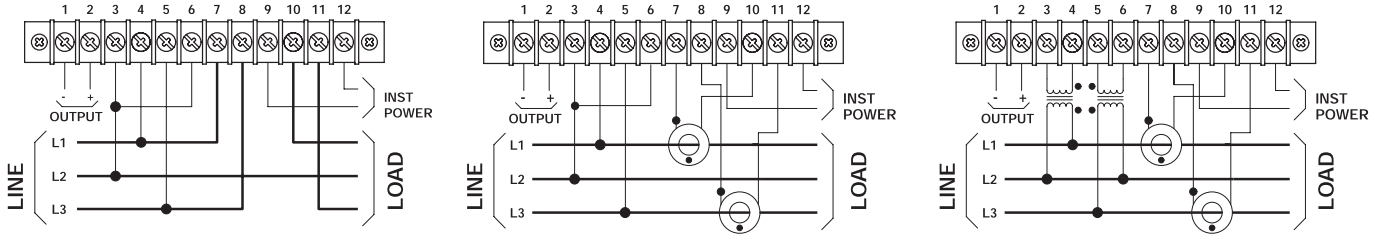

DIRECT CONNECTION | USING ONLY CURRENT TRANSFORMERS | USING POTENTIAL AND CURRENT TRANSFORMERS

THREE-PHASE, FOUR-WIRE CONNECTIONS (2 1/2 ELEMENT)

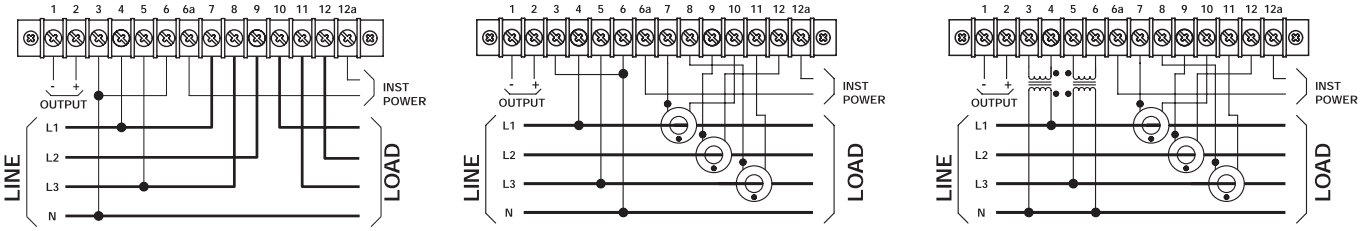

DIRECT CONNECTION | USING ONLY CURRENT TRANSFORMERS | USING POTENTIAL AND CURRENT TRANSFORMERS

THREE-PHASE, FOUR-WIRE CONNECTIONS (THREE ELEMENT)

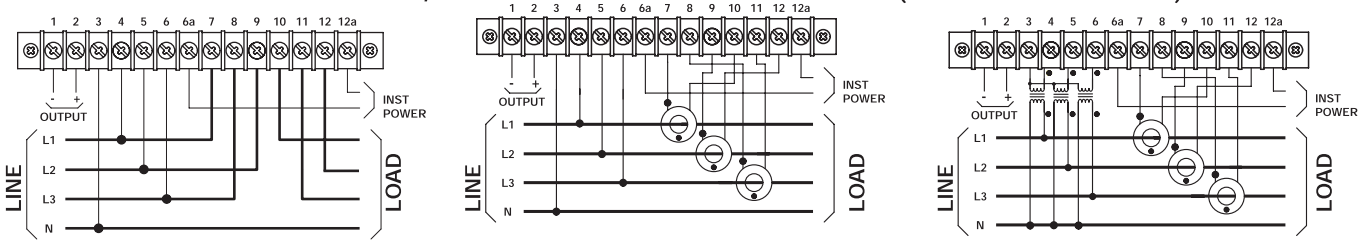

DIRECT CONNECTION | USING ONLY CURRENT TRANSFORMERS | USING POTENTIAL AND CURRENT TRANSFORMERS

DIMENSIONS

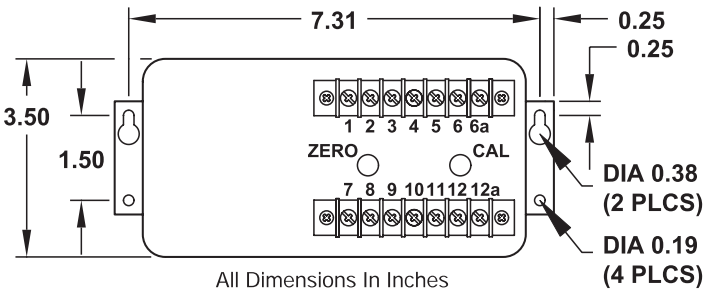

All Dimensions In Inches

CASE HEIGHT 5.88"
1PH 2W 2.4 Lbs.
3PH 3W 3.3 Lbs.
3PH 4W 4.4 Lbs.

FLEX-CORE®
Div. Morlan & Associates, Inc.
4970 Scioto Darby Rd. Hilliard, Ohio 43026
WWW.FLEX-CORE.COM
sales@flex-core.com
PHONE (614) 889-6152
TECH. ASSISTANCE (614) 876-8308
FAX # (614) 876-8538

WATT TRANSDUCERS

AC WATT/POWER FACTOR/VOLT-AMPERE TRANSDUCER *MODEL* PC20

FEATURES

- True Power measurements for sinusoidal and distorted waveforms.
- Volt-Ampere measurement for sinusoidal and distorted waveforms.
- Power Factor is derived from the ratio of True Power to Apparent Power and remains accurate for SCR controlled or otherwise distorted waveforms.
- Three separate output signals - one each for Watts, Power Factor, Volt-Amperes.
- Wide frequency range - 50 to 400Hz

APPLICATIONS

- Equipment monitoring to determine and/or maintain efficiency.
- Process monitoring and/or controlling to maintain consistent product quality.
- For use with SCR controlled, chopped, or otherwise distorted waveforms.
- **0.25% Accuracy.**



SINGLE PHASE, TWO WIRE (ONE ELEMENT)

INPUTS		F.S.	STANDARD OUTPUTS (W, PF, VA) MODEL PC20-						
AC VOLTS	AC AMPS	(W,VA)	0-1mAdc*	0-1mAdc	0-10Vdc*	0-10Vdc	0-5Vdc*	0-5Vdc	4-20mAdc
0-150	0-1	100	103A	103B	103C	103D	103CX5	103X5	103E
	0-5	500	001A	001B	001C	001D	001CX5	001X5	001E
NOMINAL 115	0-10	1000	010A	010B	010C	010D	010CX5	010X5	010E
	0-20	2000	117A	117B	117C	117D	117CX5	117X5	117E
0-300	0-1	200	104A	104B	104C	104D	104CX5	104X5	104E
	0-5	1000	002A	002B	002C	002D	002CX5	002X5	002E
NOMINAL 230	0-10	2000	011A	011B	011C	011D	011CX5	011X5	011E
	0-20	4000	110A	110B	110C	110D	110CX5	110X5	110E
0-600	0-1	400	105A	105B	105C	105D	105CX5	105X5	105E
	0-5	2000	003A	003B	003C	003D	003CX5	003X5	003E
NOMINAL 480	0-10	4000	012A	012B	012C	012D	012CX5	012X5	012E
	0-20	8000	111A	111B	111C	111D	111CX5	111X5	111E

THREE PHASE, THREE WIRE (TWO ELEMENT)

INPUTS		F.S.	STANDARD OUTPUTS (W, PF, VA) MODEL PC20-						
AC VOLTS	AC AMPS	(W,VA)	0-1mAdc*	0-1mAdc	0-10Vdc*	0-10Vdc	0-5Vdc*	0-5Vdc	4-20mAdc
0-150	0-1	200	118A	118B	118C	118D	118CX5	118X5	118E
	0-5	1000	004A	004B	004C	004D	004CX5	004X5	004E
NOMINAL 115	0-10	2000	013A	013B	013C	013D	013CX5	013X5	013E
	0-20	4000	112A	112B	112C	112D	112CX5	112X5	112E
0-300	0-1	400	119A	119B	119C	119D	119CX5	119X5	119E
	0-5	2000	005A	005B	005C	005D	005CX5	005X5	005E
NOMINAL 230	0-10	4000	014A	014B	014C	014D	014CX5	014X5	014E
	0-20	8000	113A	113B	113C	113D	113CX5	113X5	113E
0-600	0-1	800	120A	120B	120C	120D	120CX5	120X5	120E
	0-5	4000	006A	006B	006C	006D	006CX5	006X5	006E
NOMINAL 480	0-10	8000	015A	015B	015C	015D	015CX5	015X5	015E
	0-20	16000	114A	114B	114C	114D	114CX5	114X5	114E

Highlighted models (5A) may be used with current transformers.
*Denotes self-powered units. Input voltage ranges limited to:
85-135V for 150Vac models
200-280V for 300Vac models
380-550V for 600Vac models
All others require a separate 120Vac (85 - 135V) instrument power.
Optional 230Vac instrument power - Add suffix "**-22**"
All except "E" Models Outputs are Bi-Directional.

ORDERING INFORMATION

Example: Three-Phase, Three-Wire,
230V 5A, 0-10V Output,
Proportional to 0-2000W (VA),
with Separate 120Vac Instrument Power.
PC20-005D

FLEX-CORE®
Div. Morlan & Associates, Inc.
4970 Scioto Darby Rd. Hilliard, Ohio 43026
WWW.FLEX-CORE.COM
sales@flex-core.com
PHONE (614) 889-6152
TECH. ASSISTANCE (614) 876-8308
FAX # (614) 876-8538

WATT TRANSDUCERS

AC WATT/POWER FACTOR/VOLT-AMPERE TRANSDUCER *MODEL* PC20

THREE PHASE, FOUR WIRE (THREE ELEMENT)

INPUTS		F.S.	STANDARD OUTPUTS (W, PF, VA) MODEL PC20-						
AC VOLTS	AC AMPS	(W, VA)	0-1mAdc*	0-1mAdc	0-10Vdc*	0-10Vdc	0-5Vdc*	0-5Vdc	4-20mAdc
0-150 L-N NOMINAL 115	0-1	300	124A	124B	124C	124D	124CX5	124X5	124E
	0-5	1500	007A	007B	007C	007D	007CX5	007X5	007E
	0-10	3000	016A	016B	016C	016D	016CX5	016X5	016E
	0-20	6000	115A	115B	115C	115D	115CX5	115X5	115E
0-300 L-N NOMINAL 277	0-1	600	125A	125B	125C	125D	125CX5	125X5	125E
	0-5	3000	008A	008B	008C	008D	008CX5	008X5	008E
	0-10	6000	017A	017B	017C	017D	017CX5	017X5	017E
	0-20	12000	116A	116B	116C	116D	116CX5	116X5	116E

Voltage Specifications for 3-Phase, 4-Wire are "Line to Neutral"

SPECIFICATIONS

INPUT

Voltage ..... See Tables
Current ..... See Tables
Frequency Range ..... 50 to 400Hz
Power Factor ..... Any
Response ...(90%) 1ms
Burden
- Voltage 0.1VA/phase
- Current 0.28VA/phase

Over Range (w/o damage)
- Voltage (cont.) ..... 150V Range 175V
  300V Range 350V
  600V Range 600V
- Current (cont.) ..... 1A, 5A, 10A Range ..... 2 X Rated
  20A Range 20A

Dielectric Test....(Input/Output/Case) 1500Vac
Instrument Power 85-135Vac, 50-400Hz,10VA
"**-22**" Option ..... 230Vac, 50/60Hz, ±15%

OUTPUT

ACCURACY

Includes effects of linearity, set point, repeatability and power factor at nominal voltage input @ ±10%

W/VA ..... 50-60Hz ..... ± 0.25% F.S.
Power Factor ..... 10-100% VA,50/60Hz ..... ± 0.005 P.F.
W/VA ..... 50-400Hz ..... ± 0.5% F.S.
Power Factor ..... 10%-100%VA, 50-400Hz ..... ±0.01 P.F.

Power Factor ..... F.S. at unity, Zero at lead or lag zero
Ripple ..... < 1% F.S.
Output Loading (Ω)
- 1mAdc 0-10K
- 5Vdc, 10Vdc ..... 2K min.
- 4-20mAdc 0-500

Response Time..... (90%) 250ms
Temperature Range ..... -10°C to +60°C
Temperature Effect ..... ±1.0% of Rdg., ±0.1% F.S.

DIMENSIONS

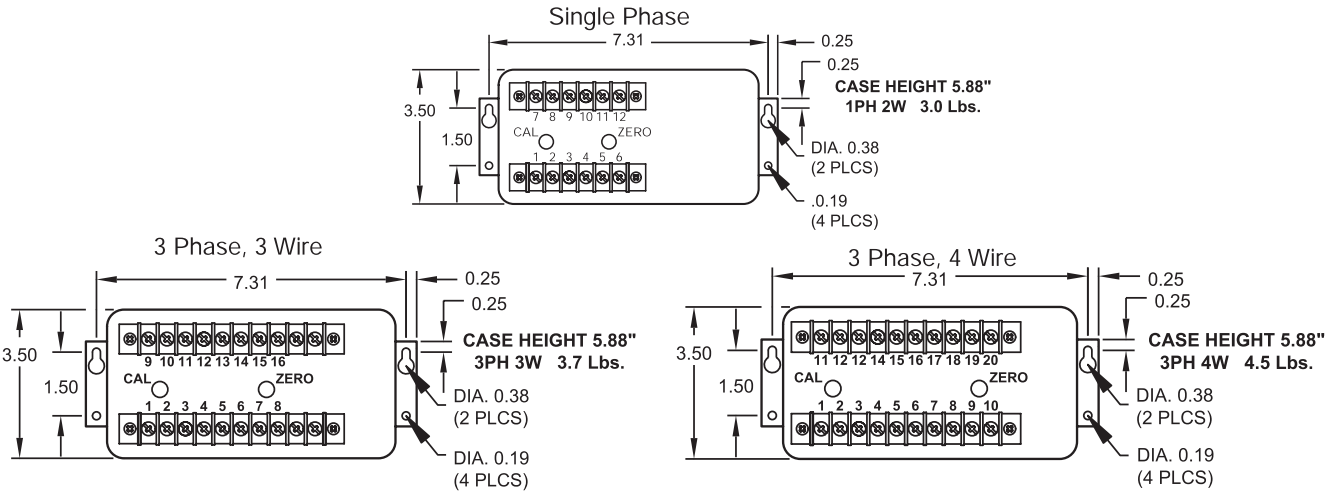

All Dimensions In Inches

FLEX-CORE®
Div. Morlan & Associates, Inc.
4970 Scioto Darby Rd. Hilliard, Ohio 43026
WWW.FLEX-CORE.COM
sales@flex-core.com
PHONE (614) 889-6152
TECH. ASSISTANCE (614) 876-8308
FAX # (614) 876-8538

WATT TRANSDUCERS

CONNECTION DIAGRAMS — *MODEL* PC20

SINGLE PHASE CONNECTIONS
(ONE ELEMENT)

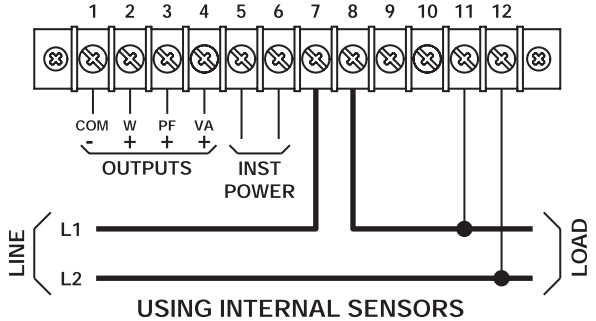

USING INTERNAL SENSORS

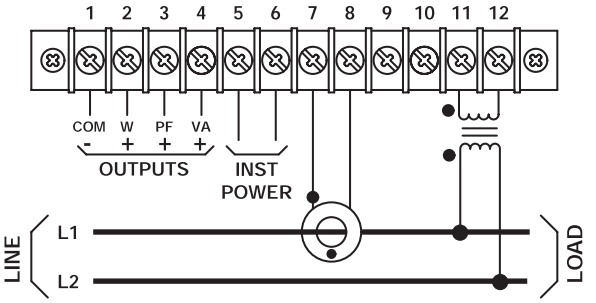

USING CURRENT TRANSFORMERS
AND POTENTIAL TRANSFORMERS

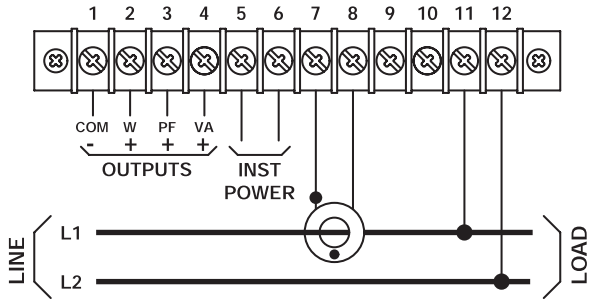

USING CURRENT TRANSFORMERS

THREE-PHASE, THREE-WIRE CONNECTIONS
(TWO ELEMENT)

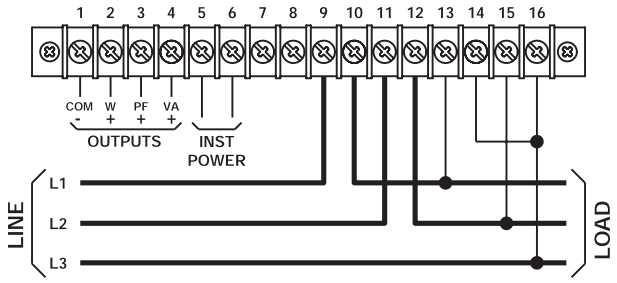

USING INTERNAL SENSORS

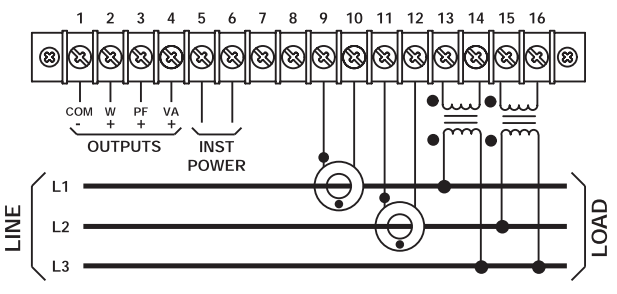

USING CURRENT TRANSFORMERS
AND POTENTIAL TRANSFORMERS

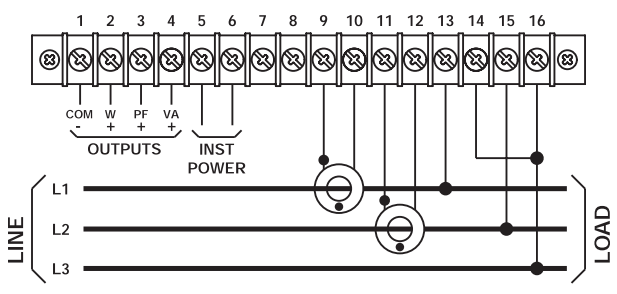

USING CURRENT TRANSFORMERS

THREE-PHASE, FOUR-WIRE CONNECTIONS (THREE ELEMENT)

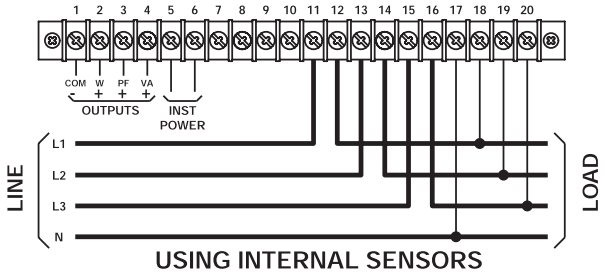

USING INTERNAL SENSORS

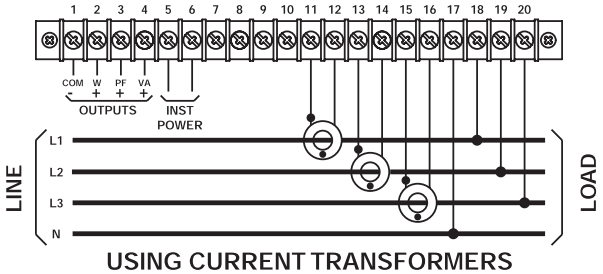

USING CURRENT TRANSFORMERS

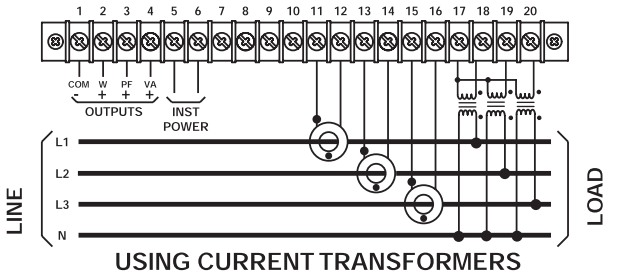

USING CURRENT TRANSFORMERS
AND POTENTIAL TRANSFORMERS

FLEX-CORE®
Div. Morlan & Associates, Inc.
4970 Scioto Darby Rd. Hilliard, Ohio 43026

WWW.FLEX-CORE.COM
sales@flex-core.com

PHONE (614) 889-6152
TECH. ASSISTANCE (614) 876-8308
FAX # (614) 876-8538

WATT TRANSDUCERS

VARIABLE FREQUENCY WATT TRANSDUCER *MODEL* P

VARIABLE FREQUENCY (5 TO 500 HERTZ)

FEATURES

- Accurate from 5 to 500Hz, **Factory calibrated**.
- Available in single phase and any three phase configuration.
- Available with split core current sensors.

APPLICATIONS

- Accurate monitoring of power that contains dc and non-sinusoidal ac components.
- Ideal for use in phase angle firing circuits or frequency synthesizers.
- Bi-directional output.



SINGLE PHASE (ONE ELEMENT)

INPUTS		F.S.	SENSOR	STANDARD OUTPUTS MODEL P-					
AC VOLTS	AC AMPS	(WATTS)	SIZE	0-±1mAdc	0-±10Vdc	4-20mAdc	4-12-20mAdc	0-20mAdc	0-±5Vdc
0-150	0-100	10K	C	121B	121D	121E	121EM	121EA	121X5
	0-200	20K	D	124B	124D	124E	124EM	124EA	124X5
	0-400	40K	D	127B	127D	127E	127EM	127EA	127X5
	0-600	60K	E	130B	130D	130E	130EM	130EA	130X5
	0-1000	100K	E	133B	133D	133E	133EM	133EA	133X5
	0-2000	200K	E	136B	136D	136E	136EM	136EA	136X5
0-300	0-100	20K	C	122B	122D	122E	122EM	122EA	122X5
	0-200	40K	D	125B	125D	125E	125EM	125EA	125X5
	0-400	80K	D	128B	128D	128E	128EM	128EA	128X5
	0-600	120K	E	131B	131D	131E	131EM	131EA	131X5
	0-1000	200K	E	134B	134D	134E	134EM	134EA	134X5
	0-2000	400K	E	137B	137D	137E	137EM	137EA	137X5
0-600	0-100	40K	C	123B	123D	123E	123EM	123EA	123X5
	0-200	80K	D	126B	126D	126E	126EM	126EA	126X5
	0-400	160K	D	129B	129D	129E	129EM	129EA	129X5
	0-600	240K	E	132B	132D	132E	132EM	132EA	132X5
	0-1000	400K	E	135B	135D	135E	135EM	135EA	135X5
	0-2000	800K	E	138B	138D	138E	138EM	138EA	138X5

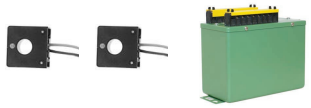

THREE PHASE, THREE WIRE (TWO ELEMENT)

INPUTS		F.S.	SENSOR	STANDARD OUTPUTS MODEL P-					
AC VOLTS	AC AMPS	(WATTS)	SIZE	0-±1mAdc	0-±10Vdc	4-20mAdc	4-12-20mAdc	0-20mAdc	0-±5Vdc
0-150	0-100	20K	C	142B	142D	142E	142EM	142EA	142X5
	0-200	40K	D	145B	145D	145E	145EM	145EA	145X5
	0-400	80K	D	148B	148D	148E	148EM	148EA	148X5
	0-600	120K	E	151B	151D	151E	151EM	151EA	151X5
	0-1000	200K	E	154B	154D	154E	154EM	154EA	154X5
	0-2000	400K	E	157B	157D	157E	157EM	157EA	157X5
0-300	0-100	40K	C	143B	143D	143E	143EM	143EA	143X5
	0-200	80K	D	146B	146D	146E	146EM	146EA	146X5
	0-400	160K	D	149B	149D	149E	149EM	149EA	149X5
	0-600	240K	E	152B	152D	152E	152EM	152EA	152X5
	0-1000	400K	E	155B	155D	155E	155EM	155EA	155X5
	0-2000	800K	E	158B	158D	158E	158EM	158EA	158X5
0-600	0-100	80K	C	144B	144D	144E	144EM	144EA	144X5
	0-200	160K	D	147B	147D	147E	147EM	147EA	147X5
	0-400	320K	D	150B	150D	150E	150EM	150EA	150X5
	0-600	480K	E	153B	153D	153E	153EM	153EA	153X5
	0-1000	800K	E	156B	156D	156E	156EM	156EA	156X5
	0-2000	1600K	E	159B	159D	159E	159EM	159EA	159X5

All units require 115 Vac Instrument Power, ±15%, 50/60Hz, 15VA

OPTIONAL SPLIT CORE CURRENT SENSOR AVAILABLE

-ADD SUFFIX "S" TO PART NUMBER.

ADDITIONAL CURRENT RANGES AVAILABLE

CONSULT FACTORY

ORDERING INFORMATION
Example: Three Phase, Three Wire, 120V, 100A Input, Split Core Sensor, with ±5Vdc Output, Proportional to ±20kW
P-142X5S

FLEX-CORE®
Div. Morlan & Associates, Inc.
4970 Scioto Darby Rd. Hilliard, Ohio 43026
WWW.FLEX-CORE.COM
sales@flex-core.com
PHONE (614) 889-6152
TECH. ASSISTANCE (614) 876-8308
FAX # (614) 876-8538

WATT TRANSDUCERS

VARIABLE FREQUENCY WATT TRANSDUCER — MODEL P

VARIABLE FREQUENCY (5 TO 500 HERTZ)

THREE PHASE, FOUR WIRE (THREE ELEMENT)



AC VOLTS		F.S. (WATTS)	SENSOR SIZE	STANDARD OUTPUTS MODEL P-					
AC VOLTS	AC AMPS			0-±1mAdc	0-±10Vdc	4-20mAdc	4-12-20mAdc	0-20mAdc	0-±5Vdc
0-150 L-N	0-100	30K	C	160B	160D	160E	160EM	160EA	160X5
	0-200	60K	D	162B	162D	162E	162EM	162EA	162X5
	0-400	120K	D	164B	164D	164E	164EM	164EA	164X5
	0-600	180K	E	166B	166D	166E	166EM	166EA	166X5
	0-1000	300K	E	168B	168D	168E	168EM	168EA	168X5
	0-2000	600K	E	170B	170D	170E	170EM	170EA	170X5
0-300 L-N	0-100	60K	C	161B	161D	161E	161EM	161EA	161X5
	0-200	120K	D	163B	163D	163E	163EM	163EA	163X5
	0-400	240K	D	165B	165D	165E	165EM	165EA	165X5
	0-600	360K	E	167B	167D	167E	167EM	167EA	167X5
	0-1000	600K	E	169B	169D	169E	169EM	169EA	169X5
	0-2000	1200K	E	171B	171D	171E	171EM	171EA	171X5

SPECIFICATIONS

INPUT

Voltage..... See Tables
Current..... See Tables
Frequency Range 5-500Hz
Power Factor..... Any
Response (Transient 90%) 50µs
Burden
  Voltage..... < 0.1VA/phase
  Current..... < 0.1VA/phase
Overload
  Voltage..... 600Vac max.
  Current..... 50 X F.S.
Dielectric Test....(Input/Output/Case)..... 1500Vac
Instrument Power..... 115Vac, ±15%, 50/60Hz, 15VA
  "**-22**" Option..... 230Vac, ±15%, 50/60Hz, 15VA

OUTPUT

ACCURACY ..... ± 1.0% F.S.
Includes combined effects of linearity,repeatability and frequency.
Output Ripple..... <1.0% F.S. @ 60Hz
Output Loading (Ω)
  ±1mAdc..... 0-10K
  ±10Vdc..... 2K min.
  4-20mAdc, 4-12-20mAdc, 0-20mAdc..... 0-500
  ±5Vdc..... 2K min.
Response Time....(90%)..... 500ms
Field Adjustable Cal. ..... ± 10%
Temperature Range..... -0°C to +40°C
Temperature Effect ..... ±1.0% of Rdg., ±0.1% F.S. Output
Optional Split Core Current Sensor Available..... Add Suffix "-S"

SENSOR DIMENSIONS/CONNECTIONS

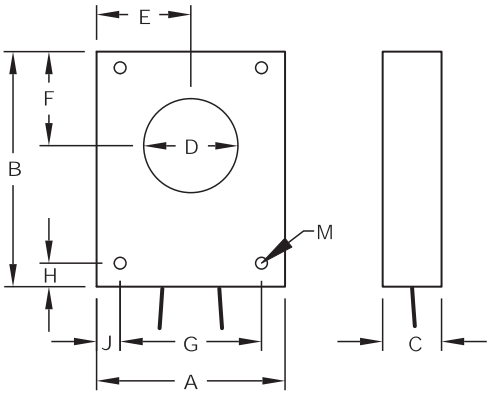

SENS. SIZE	SENSOR DIMENSIONS										WT. LBS.
	A	B	C	D	E	F	G	H	J	M	
C	2	2	3/4	3/4	1	7/8	1 1/2	1/4	1/4	5/32	0.28
D	3 1/8	4	3/4	1 1/8	1 9/16	1 1/2	2 1/8	1/2	1/2	11/64	0.75
E	4 1/8	5	1 1/4	2	2 1/16	2	3 1/4	7/16	7/16	17/64	2.80

SIGNAL	PIN	1-CABLE	PIN	2-CABLE
OUTPUT (-)	A	WHITE	1	GRAY "B"
OUTPUT (+)	B	GREEN	2	GRAY "R"
EXCITATION (-)	C	BLACK	6	BLACK "B"
EXCITATION (+)	D	RED	8	BLACK "R"

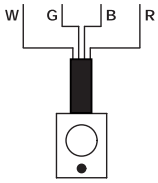

ONE CABLE CURRENT SENSOR

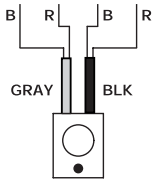

TWO CABLE CURRENT SENSOR

Solid core models are supplied with 18 inch cables on sensor sizes C & D. All other solid core models supplied with detachable 8 foot cable. Sensor size C split core models are supplied with 8 foot attached cable. All other split core models are supplied with detachable 8 foot cable. Longer cables are available.

FLEX-CORE®
Div. Morlan & Associates, Inc.
4970 Scioto Darby Rd. Hilliard, Ohio 43026
WWW.FLEX-CORE.COM
sales@flex-core.com
PHONE (614) 889-6152
TECH. ASSISTANCE (614) 876-8308
FAX # (614) 876-8538

WATT TRANSDUCERS

CONNECTIONS AND DIMENSIONS — MODEL P

WARNING! SHOCK HAZARD!
CURRENT SENSOR TERMINALS
ARE AT LINE POTENTIAL.

ONE-CABLE CURRENT SENSORS

SINGLE-PHASE CONNECTIONS

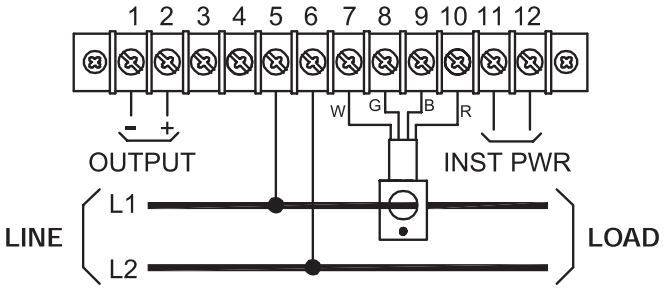

THREE-PHASE, THREE WIRE CONNECTIONS

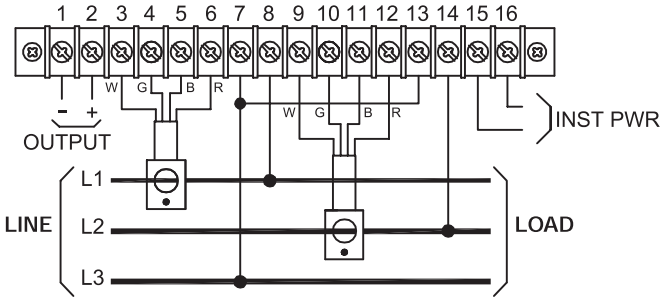

THREE-PHASE, FOUR WIRE CONNECTIONS

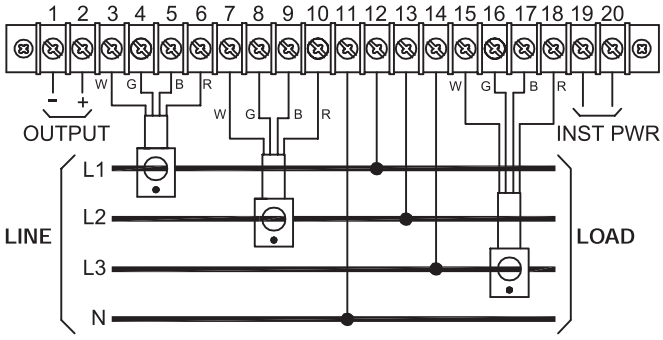

TWO-CABLE CURRENT SENSORS

SINGLE-PHASE CONNECTIONS

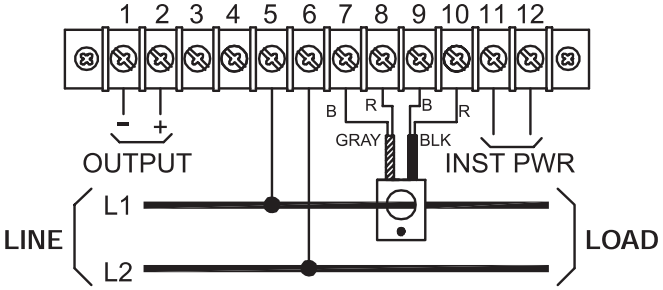

THREE-PHASE, THREE WIRE CONNECTIONS

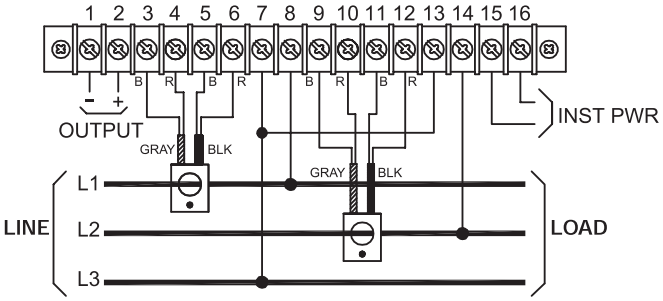

THREE-PHASE, FOUR WIRE CONNECTIONS

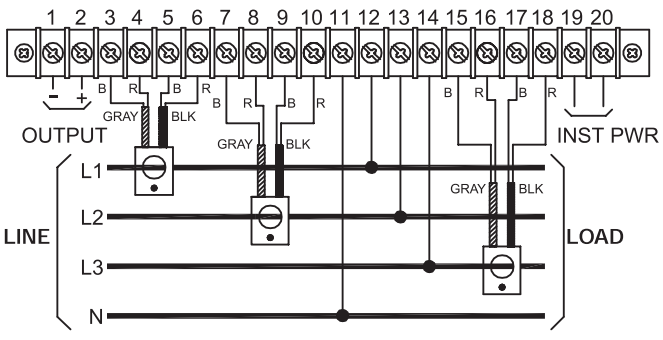

CASE DIMENSIONS

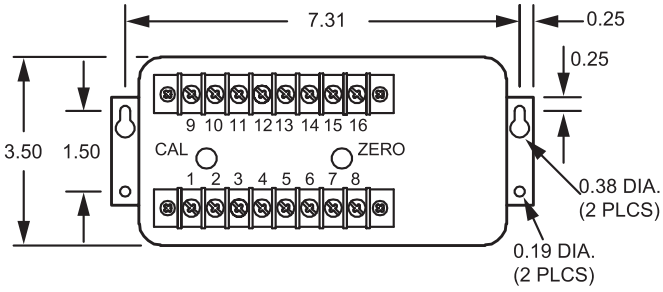

All Dimensions In Inches

CASE HEIGHT 5.88"
1PH 2W TYP 3.0 Lbs.
2PH 3W TYP 3.5 Lbs.
3PH 4W TYP 4.0 Lbs.

FLEX-CORE®
Div. Morlan & Associates, Inc.
4970 Scioto Darby Rd. Hilliard, Ohio 43026
WWW.FLEX-CORE.COM
sales@flex-core.com
PHONE (614) 889-6152
TECH. ASSISTANCE (614) 876-8308
FAX # (614) 876-8538

WATT TRANSDUCERS

MULTIPLE OUTPUT AC POWER TRANSDUCER *MODEL* PTB

FEATURES

- Small Package
- Less Wiring
- High Accuracy
- Up to 9 Analog Outputs
- Circuit Board Design
- Direct Inputs to 600 Vac
- Low Cost



PHASE		VOLTAGE		CURRENT		OUTPUTS		INST. PWR.		OPTION P	OPTION W	OPTION C
1	1 PH-2 W, 1 Ele	1	0 - 150 Vac	1	0 - 5 A	D	0 - 10Vdc	1	115Vac	Apparent	Watthours	NEMA Case
2	3 PH-3 W, 2 Ele	2	0 - 300 Vac			B	0 - 1mAdc			Power (VA)		10 X 12 X 4
*3	3 PH-4 W, 3 Ele	3	0 - 600 Vac			E	4 - 20mAdc	2	230Vac	& Power		
*4	1 PH-3 W, 2 Ele									Factor (PF)		

*Specify L-N Voltage

ORDERING INFORMATION

Example: PTB - (Phase = 3 Phase 3 Wire and 2 Element) - (Voltage = 0 To 150Vac) - (Current =0 To 5 Amps) - (Output = 10Vdc) - (Inst. Pwr. = 115Vac Instrument Power) - (Option = Watthour)

PTB-211D1W

DESCRIPTION

- The board level transducer is designed to measure and provide analog output signals for all parameters of voltage, current and total power.
- Optional outputs for power factor, apparent power "VA" and watt hours are available as plug-in circuit cards.
- The 10.75" X 8.9" X 2.5" circuit board is provided with mounting holes to fit a 10" X 12" NEMA case or the circuit board can be mounted in the user's cabinet with the stand offs provided. Input and output terminals are located directly on the circuit board.
- All of the electronics circuitry uses solid state multipliers, RMS converters and amplifier. The unit requires 115Vac instrument power. **(Optional 230Vac is available)**
- The unit is calibrated at the factory using standards traceable to NIST.

SPECIFICATIONS

INPUT

VOLTAGE

F.S. Linear Range ..... See Table
Over Voltage ..... 150Vac .....(175Vac)
300Vac .....(350Vac)
600Vac .....(610Vac)
Burden ..... <0.25VA/Phase

CURRENT

All models are linear through full-scale current range.
Continuous over current
5A models 10Aac
Burden ..... < 0.25VA/Phase
Frequency Range ..... (Linear)..... 48-70Hz
Power Factor.....Any
Dielectric Test ..... (Input To Outputs) 1500Vac

OUTPUT SCALING (OUTPUT RANGE SHOWN FOR "D" OPTION)

Voltage (RMS) (3).....0 - 10Vdc = 0 - F.S. Voltage
Current (RMS) (3).....0 - 10Vdc = 0 - F.S. Current
*Watts (True Power).....0 - 10Vdc = 0 - F.S. Watts
*Output Scaling Example
Full Scale Watts = F.S. Volts x F.S. Amps x No. of Elements x 0.8
Output Burden ..... 10V.....> 2KΩ
1mA.....0-10KΩ
20mA..... 0-500Ω
Ripple.....< ±1% F.S.

OPTIONS

Apparent Power (VA) .....* Same as watts
Power Factor..... 0 - 10Vdc ..... 0 - 1 Lead or Lag.
Watt hours
5A Models.....1 WH/C
Relay Rating 120V, 0.5A
Relay Closure Duration.....200ms

ACCURACY

(Includes linearity, set point and power factor at 25°C)
Voltage..... ±0.3% F.S.
Current..... ±0.3% F.S.
Power ..... ±0.3% F.S.
Watthours ..... (Option) ..... ±0.5% F.S.
Power Factor..(10-100% Input).... (Option) .....±0.01 PF
Response Time.....250ms
Temperature Effects..... (+10° to +35°C)..... ±0.5%
Instrument Power..... 115Vac, ±15%, 50-400Hz, 8.5VA
(Option) ..... 230Vac, ±15% 50/60Hz, 8.5VA

FLEX-CORE®
Div. Morlan & Associates, Inc.
4970 Scioto Darby Rd. Hilliard, Ohio 43026
WWW.FLEX-CORE.COM
sales@flex-core.com
PHONE (614) 889-6152
TECH. ASSISTANCE (614) 876-8308
FAX # (614) 876-8538

WATT TRANSDUCERS

MULTIPLE OUTPUT AC POWER TRANSDUCER *MODEL* PTB

CONNECTION DIAGRAMS

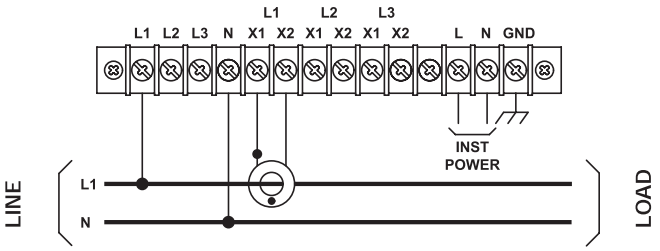

1Ø 2W WITH CURRENT TRANSFORMERS

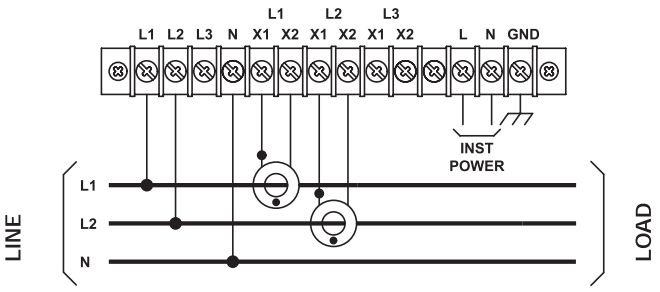

1Ø 3W WITH CURRENT TRANSFORMERS

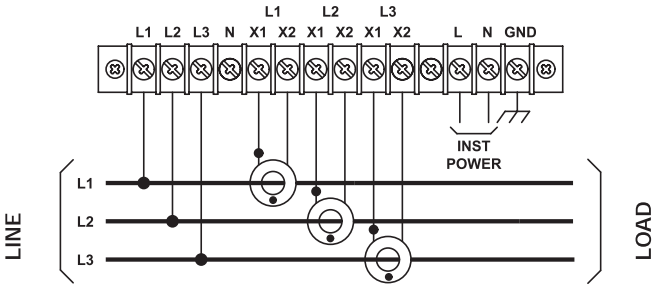

3Ø 3W WITH CURRENT TRANSFORMERS

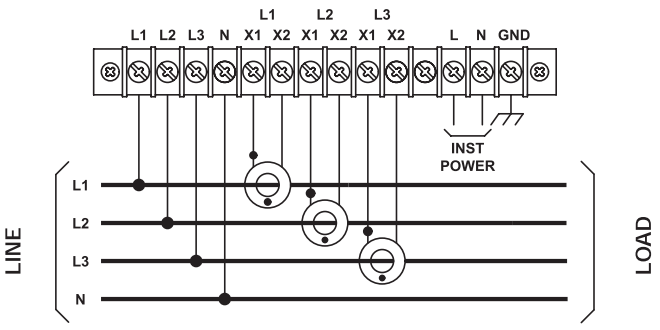

3Ø 4W WITH CURRENT TRANSFORMERS

DIMENSIONS

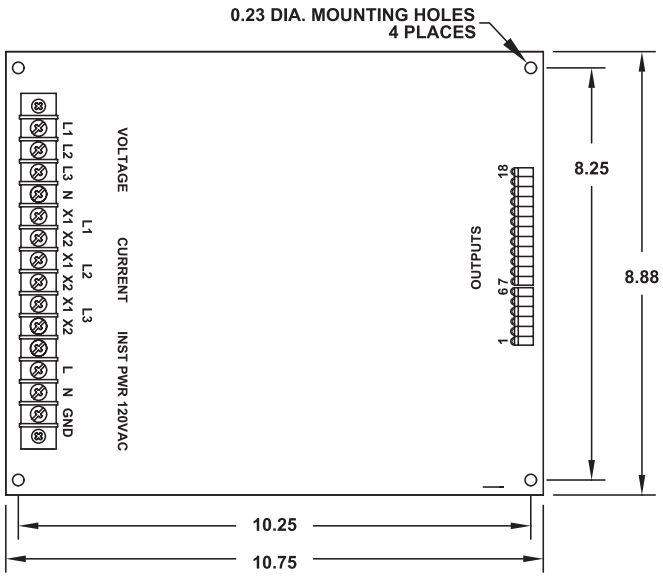

Optional NEMA Case ..... 12" X 10" X 4"
Mounting..... 12.5" X 8.12", .22 Dia. Holes
Weight ..... 3.0 Lbs.

All Dimensions In Inches

OUTPUT CONNECTIONS

1 Phase, 2 Wire		3 Phase, 3 Wire		3 Phase, 4 Wire		1 Phase, 3 Wire	
1	Watthour Relay	1	Watthour Relay	1	Watthour Relay	1	Watthour Relay
2		2		2		2	
3	NA	3	NA	3	NA	3	NA
4	NA	4	NA	4	NA	4	NA
5	Common	5	Common	5	Common	5	Common
6	Common	6	Common	6	Common	6	Common
7	Common	7	Common	7	Common	7	Common
8	Power Factor	8	Power Factor	8	Power Factor	8	Power Factor
9	Volt-Amperes	9	Volt-Amperes	9	Volt-Amperes	9	Volt-Amperes
10	Watts	10	Watts	10	Watts	10	Watts
11	Common	11	Common	11	Common	11	Common
12	NA	12	L3 Current	12	L3 Current	12	NA
13	NA	13	L2 Current	13	L2 Current	13	L2 Current
14	Current	14	L1 Current	14	L1 Current	14	L1 Current
15	Common	15	Common	15	Common	15	Common
16	NA	16	L1-L2 Voltage	16	L3-N Voltage	16	NA
17	NA	17	L2-L3 Voltage	17	L2-N Voltage	17	L2-N Voltage
18	Voltage	18	L3-L1 Voltage	18	L1-N Voltage	18	L1-N Voltage

FLEX-CORE®
Div. Morlan & Associates, Inc.
4970 Scioto Darby Rd. Hilliard, Ohio 43026
WWW.FLEX-CORE.COM
sales@flex-core.com
PHONE (614) 889-6152
TECH. ASSISTANCE (614) 876-8308
FAX # (614) 876-8538

WATT or VAR TRANSDUCERS

PRECISION AC WATT OR VAR TRANSDUCER *MODELS* GW5, GV5

ACCURATE TO 0.2% OF READING

FEATURES

- Accurate regardless of variations in voltage,current, power factor, or load.
- Available with 1, 2, 2 1/2 or 3 element configurations. Provides bi-directional operation. (Except for 4-20mA output models)
- Accuracy maintained over wide temperature range, calibration traceable to **NIST**.

APPLICATIONS

- Equipment monitoring for process control.
- Integration into energy management systems, or a variety of sub-metering applications.
- Measurement using direct-connection, current transformers, and/or potential transformers.



SINGLE PHASE, TWO WIRE MODELS WITH INTERNAL SENSOR (ONE ELEMENT)

AC INPUTS		F.S. WATTS OR VARS	STANDARD OUTPUTS MODEL GW5- OR GV5-									
VOLTS	AMPS		0-±1mAdc*	0-±1mAdc	0-±10Vdc*	0-±10Vdc	4-20mAdc	4-20mA*	4-12-20mA	4-12-20mA*	0-±5Vdc*	0-±5Vdc
0-150	0-1	100	103A	103B	103C	103D	103E	103EG	103EM	103EMG	103CX5	103X5
	0-5	500	001A	001B	001C	001D	001E	001EG	001EM	001EMG	001CX5	001X5
	0-10	1K	010A	010B	010C	010D	010E	010EG	010EM	010EMG	010CX5	010X5
	0-20	2K	019A	019B	019C	019D	019E	019EG	019EM	019EMG	019CX5	019X5
0-300	0-1	200	104A	104B	104C	104D	104E	104EG	104EM	104EMG	104CX5	104X5
	0-5	1K	002A	002B	002C	002D	002E	002EG	002EM	002EMG	002CX5	002X5
	0-10	2K	011A	011B	011C	011D	011E	011EG	011EM	011EMG	011CX5	011X5
	0-20	4K	020A	020B	020C	020D	020E	020EG	020EM	020EMG	020CX5	020X5
0-600	0-1	500	105A	105B	105C	105D	105E	105EG	105EM	105EMG	105CX5	105X5
	0-5	2K	003A	003B	003C	003D	003E	003EG	003EM	003EMG	003CX5	003X5
	0-10	4K	012A	012B	012C	012D	012E	012EG	012EM	012EMG	012CX5	012X5
	0-20	8K	021A	021B	021C	021D	021E	021EG	021EM	021EMG	021CX5	021X5

Highlighted models, (5A), can be used with current transformers.

*Denotes self-powered unit, limiting input voltage ranges to:

85-135 for 150Vac models

200-280 for 300Vac models

380-550 for 600Vac models

All others require 85-135Vac instrument power, 60Hz

Add suffix **"-22"** for 230Vac Instrument Power (60Hz)

Optional 50ms Output Response to 90% Add Suffix "W"

ORDERING INFORMATION

Example: Self-Powered, Single-Phase, 120V, 5A Input with ±5Vdc Output Proportional to ±500 Vars.

GV5-001CX5

50 HERTZ MODELS

Add suffix "**-50**" to part number.

THREE PHASE, THREE WIRE MODELS WITH INTERNAL SENSOR (TWO ELEMENT)

AC INPUTS		F.S. WATTS OR VARS	STANDARD OUTPUTS MODEL GW5- OR GV5-									
VOLTS	AMPS		0-±1mAdc*	0-±1mAdc	0-±10Vdc*	0-±10Vdc	4-20mAdc	4-20mA*	4-12-20mA	4-12-20mA*	0-±5Vdc*	0-±5Vdc
0-150	0-1	200	120A	120B	120C	120D	120E	120EG	120EM	120EMG	120CX5	120X5
	0-5	1K	004A	004B	004C	004D	004E	004EG	004EM	004EMG	004CX5	004X5
	0-10	2K	013A	013B	013C	013D	013E	013EG	013EM	013EMG	013CX5	013X5
	0-20	4K	022A	022B	022C	022D	022E	022EG	022EM	022EMG	022CX5	022X5
0-300	0-1	400	121A	121B	121C	121D	121E	121EG	121EM	121EMG	121CX5	121X5
	0-5	2K	005A	005B	005C	005D	005E	005EG	005EM	005EMG	005CX5	005X5
	0-10	4K	014A	014B	014C	014D	014E	014EG	014EM	014EMG	014CX5	014X5
	0-20	8K	023A	023B	023C	023D	023E	023EG	023EM	023EMG	023CX5	023X5
0-600	0-1	800	122A	122B	122C	122D	122E	122EG	122EM	122EMG	122CX5	122X5
	0-5	4K	006A	006B	006C	006D	006E	006EG	006EM	006EMG	006CX5	006X5
	0-10	8K	015A	015B	015C	015D	015E	015EG	015EM	015EMG	015CX5	015X5
	0-20	16K	024A	024B	024C	024D	024E	024EG	024EM	024EMG	024CX5	024X5

FLEX-CORE®
Div. Morlan & Associates, Inc.
4970 Scioto Darby Rd. Hilliard, Ohio 43026

WWW.FLEX-CORE.COM
sales@flex-core.com

PHONE (614) 889-6152
TECH. ASSISTANCE (614) 876-8308
FAX # (614) 876-8538

WATT or VAR TRANSDUCERS

PRECISION AC WATT OR VAR TRANSDUCER *MODELS* GW5, GV5

ACCURATE TO 0.2% OF READING



THREE PHASE, FOUR WIRE MODELS WITH INTERNAL SENSOR (THREE ELEMENT)

AC INPUTS		F.S. WATTS OR VARS	STANDARD OUTPUTS MODEL GW5- OR GV5-									
VOLTS	AMPS		0-±1mAdc*	0-±1mAdc	0-±10Vdc*	0-±10Vdc	4-20mAdc	4-20mA*	4-12-20mA	4-12-20mA*	0-±5Vdc*	0-±5Vdc
0-150 L-N	0-1	300	125A	125B	125C	125D	125E	125EG	125EM	125EMG	125CX5	125X5
	0-5	1.5K	007A	007B	007C	007D	007E	007EG	007EM	007EMG	007CX5	007X5
	0-5	1.5K	7.5A	7.5B	7.5C	7.5D	7.5E	7.5EG	7.5EM	7.5EMG	7.5CX5	7.5X5
	0-10	3K	016A	016B	016C	016D	016E	016EG	016EM	016EMG	016CX5	016X5
	0-20	6K	025A	025B	025C	025D	025E	025EG	025EM	025EMG	025CX5	025X5
0-300 L-N	0-1	600	126A	126B	126C	126D	126E	126EG	126EM	126EMG	126CX5	126X5
	0-5	3K	008A	008B	008C	008D	008E	008EG	008EM	008EMG	008CX5	008X5
	0-5	3K	8.5A	8.5B	8.5C	8.5D	8.5E	8.5EG	8.5EM	8.5EMG	8.5CX5	8.5X5
	0-10	6K	017A	017B	017C	017D	017E	017EG	017EM	017EMG	017CX5	017X5
	0-20	12K	026A	026B	026C	026D	026E	026EG	026EM	026EMG	026CX5	026X5

NOTE: PART NUMBER 7.5 and 8.5 DENOTE 2 1/2 ELEMENT UNIT.

Highlighted models, (5A), can be used with current transformers.
Voltage specifications are **line-to-neutral voltage**.
*Denotes self-powered unit, limiting input voltage ranges to:
85-135 for 150Vac models
200-280 for 300Vac models
380-550 for 600Vac models
All others require 85-135Vac Instrument power, (60Hz)
Add suffix "-22" for 230Vac Instrument power (60Hz)
Optional 50ms Output Response to 90%-add suffix "W"
50 HERTZ MODELS-Add suffix **"-50"** to part number.

ORDERING INFORMATION

Example: Self-Powered, Three-Phase, Four-Wire, 120V, 5A Input with ±5Vdc Output, Proportional to ±1500 Watts.
GW5-007CX5

ORDERING INFORMATION

Example: Self-Powered, Three-Phase, Four Wire, 120V, 5A Input with ±1mAdc Output, Proportional to ±1500 VAR.
GV5-007A

SPECIFICATIONS

INPUT

Voltage ..... See Tables
Current ..... See Tables
Frequency Range .....GW5 ..... 58-62Hz
GV5 ..... 60Hz
Optional 50Hz .....GW5 ..... 48-52Hz
GV5 ..... 50Hz
Power Factor ..... Any
Burden
Voltage ..... <0.1VA/phase
Current ..... <0.28VA/phase
Overload
Voltage.. (cont.).. 150Vac Range 175Vac
300Vac Range 350Vac
600Vac Range 600Vac
Current.. (cont.).. 0-1, 5, 10Aac Ranges ..... 2 X F.S.
0-20Aac Range 20A
Transient .. 0-1Aac Range ..... 20A 10s/hr
0-5, 10, 20A Ranges .... 50A 10s/hr
0-1Aac Range ..... 100A 1s/hr
0-5, 10, 20A Ranges .... 250A 1s/hr
Dielectric Test....(Input/Output/Case) ..... 1800Vac (RMS)
Surge ..... Withstands IEEE SWC test

OUTPUT

GV5 ..... + = Lagging/ - = Leading
ACCURACY ..... ± 0.2% RDG. ..... ± 0.04% F.S.
Includes combined effects of voltage, current, load and power factor.
Output Ripple ..... < 0.5% F.S.
Output Loading (Ω)
0-1mAdc 0-10K
0-10Vdc ..... 2K min.
4-20mAdc 0-500
0-5Vdc ..... 2K min.
Response Time....(99%) ..... ≤400ms
50ms Response to 90% ..... Add suffix **"W"**
Field Adjustable Cal. ..... ± 2%
Temperature Effect .....(-20°C to +65°C) ..... ±0.005%/°C
Operating Humidity ..... 0-95% non-condensing
Instrument Power...(Std.) 85-135Vac, 60Hz, 7VA
"-22" Option ..... 230Vac, 50/60Hz, ±15%

FLEX-CORE®
Div. Morlan & Associates, Inc.
4970 Scioto Darby Rd. Hilliard, Ohio 43026
WWW.FLEX-CORE.COM
sales@flex-core.com
PHONE (614) 889-6152
TECH. ASSISTANCE (614) 876-8308
FAX # (614) 876-8538

WATT or VAR TRANSDUCERS

CONNECTION DIAGRAMS/DIMENSIONS *MODELS* GW5,GV5

SINGLE-PHASE CONNECTIONS (ONE ELEMENT)

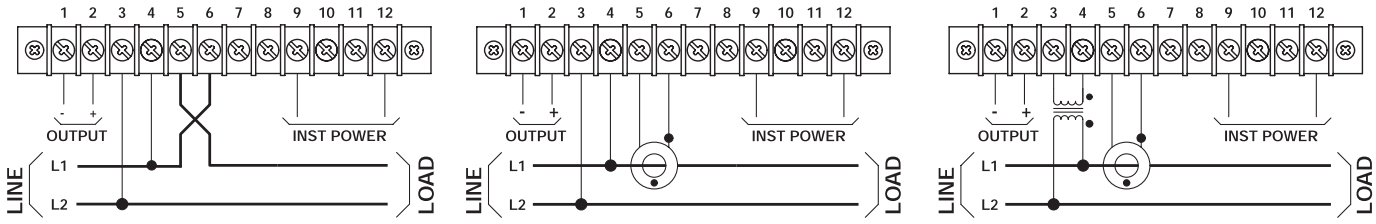

DIRECT CONNECTION

USING ONLY CURRENT TRANSFORMERS

USING POTENTIAL AND CURRENT TRANSFORMERS

THREE-PHASE, THREE-WIRE CONNECTIONS (2 ELEMENT)

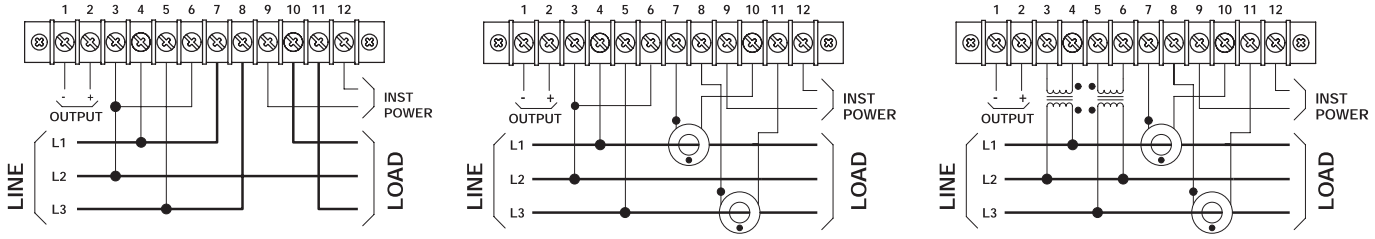

DIRECT CONNECTION

USING ONLY CURRENT TRANSFORMERS

USING POTENTIAL AND CURRENT TRANSFORMERS

THREE-PHASE, FOUR-WIRE CONNECTIONS (2 1/2 ELEMENT)

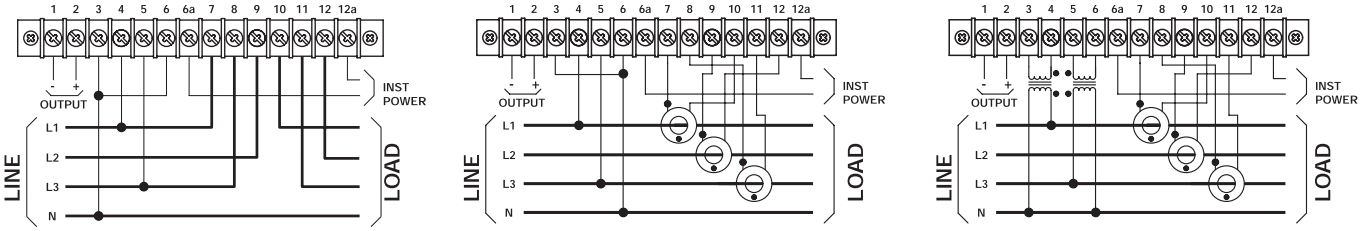

DIRECT CONNECTION

USING ONLY CURRENT TRANSFORMERS

USING POTENTIAL AND CURRENT TRANSFORMERS

THREE-PHASE, FOUR-WIRE CONNECTIONS (THREE ELEMENT)

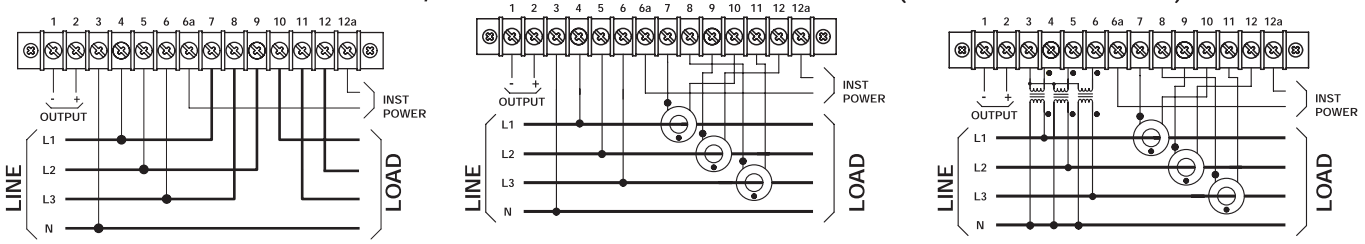

DIRECT CONNECTION

USING ONLY CURRENT TRANSFORMERS

USING POTENTIAL AND CURRENT TRANSFORMERS

DIMENSIONS

CASE HEIGHT 5.38"
1PH 2W 2.3 Lbs.
3PH 3W 2.7 Lbs.
3PH 4W 3.1 Lbs.

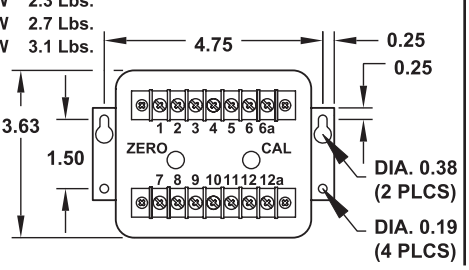

GW5 & GV5 Models with 1mA, 5V, or 10V Outputs

CASE HEIGHT 5.88"
1PH 2W 2.4 Lbs.
3PH 3W 3.3 Lbs.
3PH 4W 4.4 Lbs.

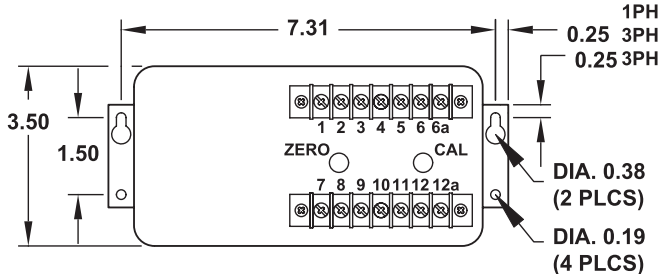

All GW5 & GV5 Models with 4-20mA Outputs

All Dimensions In Inches

FLEX-CORE®
Div. Morlan & Associates, Inc.
4970 Scioto Darby Rd. Hilliard, Ohio 43026

WWW.FLEX-CORE.COM
sales@flex-core.com

PHONE (614) 889-6152
TECH. ASSISTANCE (614) 876-8308
FAX # (614) 876-8538

WATT / VAR TRANSDUCERS

PRECISION WATT/VAR TRANSDUCER — *MODEL* GWV5

ACCURATE TO 0.2% OF READING

FEATURES

- Available in 1, 2, or 3 element configurations. Some models provide bi-directional operation.
- Accuracy maintained over wide temperature range.
- Calibration traceable to **NIST**.

APPLICATIONS

- Integration into energy management systems, or a variety of sub-metering applications.
- Measurement using direct-connection, current transformers, and/or potential transformers.

SINGLE AND THREE-PHASE MODELS WITH INTERNAL SENSOR

INPUTS		F.S. WATT/ VAR	PHASE	NO. OF ELEMENTS	STANDARD OUTPUTS (WATT AND VAR) MODEL GWV5-								
AC VOLTS	AC AMPS				±1mAdc*	±1mAdc	±10Vdc*	±10Vdc	4-20mA	4-20mA*	4-12-20mA	±5Vdc*	±5Vdc
0-150	0-5	500	1P-2W	1	001A	001B	001C	001D	001E	001EG	001EM	001CX5	001X5
0-150	0-5	1000	3P-3W	2	004A	004B	004C	004D	004E	004EG	004EM	004CX5	004X5
0-150 L-N	0-5	1500	3P-4W	3	007A	007B	007C	007D	007E	007EG	007EM	007CX5	007X5
0-300	0-5	1000	1P-2W	1	002A	002B	002C	002D	002E	002EG	002EM	002CX5	002X5
0-300	0-5	2000	3P-3W	2	005A	005B	005C	005D	005E	005EG	005EM	005CX5	005X5
0-300 L-N	0-5	3000	3P-4W	3	008A	008B	008C	008D	008E	008EG	008EM	008CX5	008X5
0-600	0-5	2000	1P-2W	1	003A	003B	003C	003D	003E	003EG	003EM	003CX5	003X5
0-600	0-5	4000	3P-3W	2	006A	006B	006C	006D	006E	006EG	006EM	006CX5	006X5

GWV5 Transducers can be used with current transformers.
Potential transformers can be used on 150V models.
*Denotes self-powered unit, limiting input voltage ranges to:
85-135 For 150Vac Models
200-280 For 300Vac Models
380-550 For 600Vac Models
Standard units require 85-135Vac instrument power, (60Hz)

50Hz Models - Add suffix **"-50"**
50ms Output Response to 90% - Add suffix **"W"**
230Vac Instrument Power - Add suffix **"-22"**

ORDERING INFORMATION
Example: Three-Phase, Three Wire 120V, 5A Input with 0-1mA Output.
GWV5-004B



SPECIFICATIONS

INPUT

Voltage ..... See Table
Current 0-5Aac
Frequency ..... 60Hz standard, 50Hz optional
Power Factor ..... Any
Burden
  Voltage ..... <0.1VA/phase
  Current ..... <0.28VA/phase
Overload
  Voltage (cont.) 175V, 350V, 600V
  Current (cont.) 10A
Dielectric Test....(Input/Output/Case) 1800Vac
Surge ..... Withstands IEEE SWC test
Instrument Power (std.) 85-135Vac, 60Hz, 7.5VA
  Option "**-22**" ..... 230Vac, 50/60Hz, ±15%

OUTPUT

Vars ..... + = Lagging/ - = Leading
ACCURACY ..... ± 0.2% Rdg. ..... ± 0.05% F.S.
Includes combined effects of voltage, current,load and power factor
Output Watts, Var ..... See Table
Output Loading (Ω)
  ±1mAdc 0-10K
  ±10Vdc, ±5Vdc ..... >2K
  4-20mAdc 0-500
Response Time..... (99%) ..... <400ms
  50ms Response to 90% ..... Add suffix **"W"**
Field Adjustable Cal. ..... ± 2% min.
Temperature Effect ..... -20°C to +60°C
  Watt ..... ±0.005%/°C
  Var ..... ±0.009%/°C
Operating Humidity ..... 0-95% non-condensing

CASE DIMENSIONS

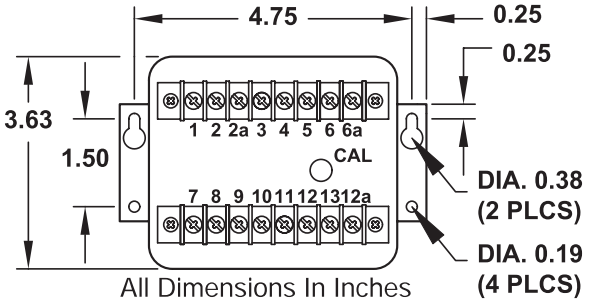

All Dimensions In Inches

CASE HEIGHT 6.50"
1PH 2W 2.6 Lbs.
3PH 3W 3.0 Lbs.
3PH 4W 3.5 Lbs.

FLEX-CORE®
Div. Morlan & Associates, Inc.
4970 Scioto Darby Rd. Hilliard, Ohio 43026
WWW.FLEX-CORE.COM
sales@flex-core.com
PHONE (614) 889-6152
TECH. ASSISTANCE (614) 876-8308
FAX # (614) 876-8538

WATT / VAR TRANSDUCERS

CONNECTION DIAGRAMS — *MODEL* GWV5

SINGLE-PHASE, TWO WIRE CONNECTIONS

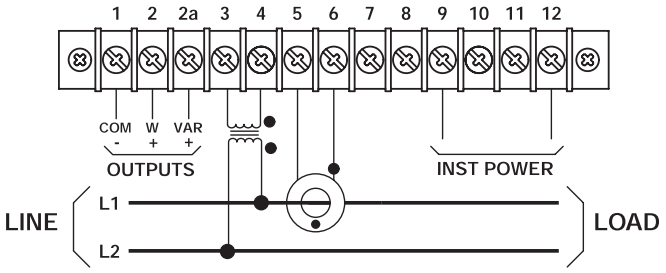

USING CURRENT TRANSFORMERS
AND POTENTIAL TRANSFORMERS

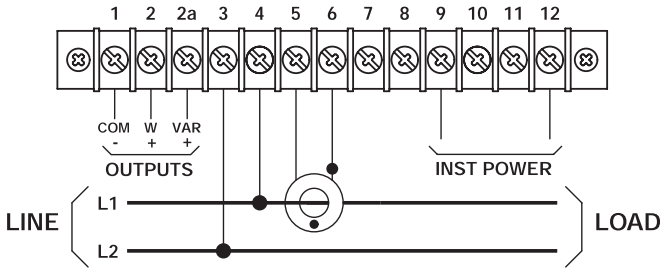

USING CURRENT TRANSFORMERS

THREE-PHASE, THREE WIRE CONNECTIONS

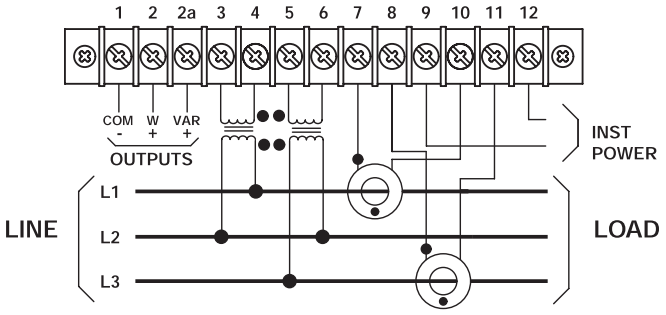

USING CURRENT TRANSFORMERS
AND POTENTIAL TRANSFORMERS

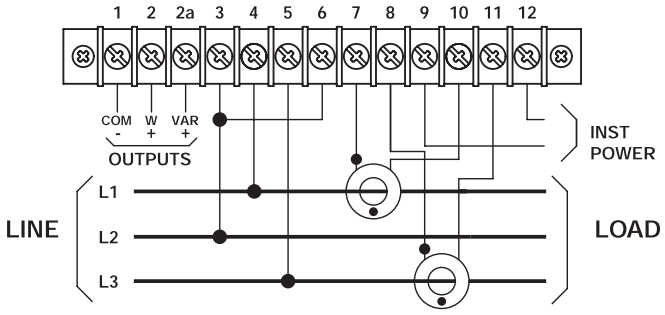

USING CURRENT TRANSFORMERS

THREE-PHASE, FOUR WIRE CONNECTIONS (3 ELEMENTS)

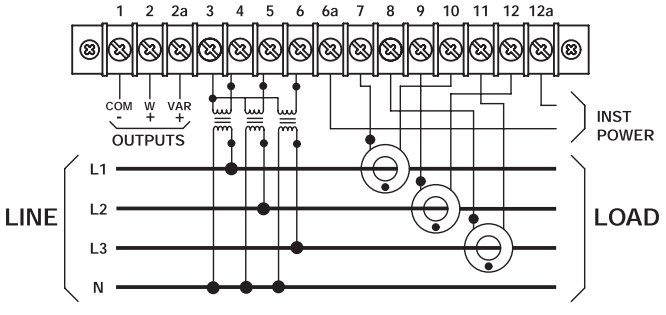

USING CURRENT TRANSFORMERS
AND POTENTIAL TRANSFORMERS

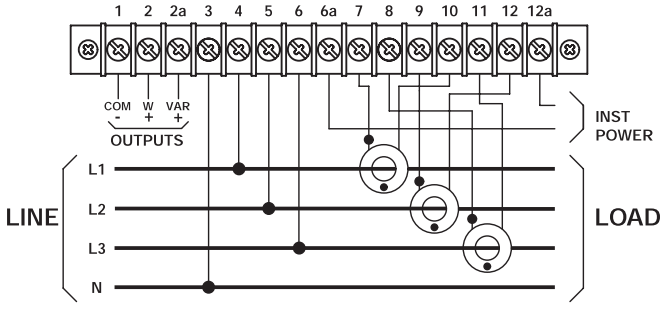

USING CURRENT TRANSFORMERS

FLEX-CORE®
Div. Morlan & Associates, Inc.
4970 Scioto Darby Rd. Hilliard, Ohio 43026
WWW.FLEX-CORE.COM
sales@flex-core.com
PHONE (614) 889-6152
TECH. ASSISTANCE (614) 876-8308
FAX # (614) 876-8538

WATT/WATTHOUR TRANSDUCERS

AC WATT/WATT HOUR TRANSDUCER *MODELS* W, W4

FEATURES

- Accurate regardless of variations in voltage, current, power factor, or load.
- Standard Analog outputs for Watts, relay contact or 5V pulse for Watthours.
- **Factory calibrated,** traceable to NIST.

APPLICATIONS

- Measurement of power consumption.
- Can be easily integrated into building management systems.
- Pulse outputs interface with electronic or mechanical counters for accumulation of Watt Hours.



(W) SINGLE PHASE, TWO WIRE 50/60 HERTZ (ONE ELEMENT)
(W4) SINGLE PHASE, TWO WIRE 400 HERTZ (ONE ELEMENT)

INPUTS		F.S. WATTS	F.S. COUNTS PER HR	STANDARD OUTPUTS MODEL W or W4-						
VOLTS	AMPS			0-±1mAdc*	0-±1mAdc	0-±10Vdc*	0-±10Vdc	0-±5Vdc*	0-±5Vdc	4-20mAdc
0-150	0-1	100	100	103A	103B	103C	103D	103CX5	103X5	103E
	0-2.5	250	250	106A	106B	106C	106D	106CX5	106X5	106E
	0-5	500	5000	001A	001B	001C	001D	001CX5	001X5	001E
	0-10	1000	1000	010A	010B	010C	010D	010CX5	010X5	010E
	0-15	1500	1500	019A	019B	019C	019D	019CX5	019X5	019E
	0-20	2000	2000	117A	117B	117C	117D	117CX5	117X5	117E
	0-25	2500	2500	118A	118B	118C	118D	118CX5	118X5	118E
0-300	0-1	200	200	104A	104B	104C	104D	104CX5	104X5	104E
	0-2.5	500	500	107A	107B	107C	107D	107CX5	107X5	107E
	0-5	1000	1000	002A	002B	002C	002D	002CX5	002X5	002E
	0-10	2000	2000	011A	011B	011C	011D	011CX5	011X5	011E
	0-15	3000	3000	020A	020B	020C	020D	020CX5	020X5	020E
	0-20	4000	4000	110A	110B	110C	110D	110CX5	110X5	110E
	0-25	5000	5000	119A	119B	119C	119D	119CX5	119X5	119E
0-600	0-1	500	500	105A	105B	105C	105D	105CX5	105X5	105E
	0-2.5	1000	1000	108A	108B	108C	108D	108CX5	108X5	108E
	0-5	2000	2000	003A	003B	003C	003D	003CX5	003X5	003E
	0-10	4000	4000	012A	012B	012C	012D	012CX5	012X5	012E
	0-15	6000	6000	021A	021B	021C	021D	021CX5	021X5	021E
	0-20	8000	8000	111A	111B	111C	111D	111CX5	111X5	111E

Highlighted models, (5A), can be used with current transformers.
*Denotes self-powered unit, limiting input voltage ranges to:
103-135 for 150Vac models
215-280 for 300Vac models
395-550 for 600Vac models
All others require 103-135Vac instrument power, (50-400Hz), 5VA.
"E" MODELS ARE UNIDIRECTIONAL ONLY.
Optional 230Vac instrument power-Add suffix **"-22"** to part number.
Add suffix **"Y27"** for use on zero-crossing SCR controllers
NOTE: This option is not available for self-powered models

OPTION "V" - PROGRAMMABLE PULSES/HOURS
OPTION "T" - TTL OUTPUT FOR WATTHOURS. 5Vdc PULSE
CUSTOM COUNT RATES ARE AVAILABLE

400 HERTZ MODELS
To order for use on 400Hz application, substitute **"W4"** in part number.

ORDERING INFORMATION
Example: Self-Powered, Single-Phase,120V, 5A Input with 0-5Vdc Output Proportional to 0-500 Watts, TTL Pulse Output for Watt Hours, each Pulse Proportional to 0.1 Watt Hours.
W-001CX5-T

FULL SCALE OUTPUT USING CURRENT TRANSFORMERS/MODEL W AND W4 WATT/WATTHOUR TRANSDUCERS

MODEL NO. (EXAMPLE) W/W4	F.S. WATTS FROM ABOVE	CURRENT TRANSFORMER RATIO (EXAMPLE)	FULL SCALE WATTS	COUNTS PER HR FROM ABOVE	WH PER COUNT
-001	500	500/5 (100:1)	50,000	5000	10
-002	1000	500/5 (100:1)	100,000	1000	100
-003	2000	500/5 (100:1)	200,000	2000	100

FULL SCALE OUTPUT USING CURRENT AND POTENTIAL TRANSFORMERS/ MODEL W AND W4 WATT/WATTHOUR TRANSDUCERS

F.S. WATTS FROM ABOVE	CURRENT TRANSFORMER RATIO (EXAMPLE)	POTENTIAL TRANSFORMER RATIO (EXAMPLE)	FULL SCALE WATTS	COUNTS PER HR FROM ABOVE	WH PER COUNT
500	500/5 (100:1)	2400/120 (20:1)	1,000,000	5000	200

FLEX-CORE®
Div. Morlan & Associates, Inc.
4970 Scioto Darby Rd. Hilliard, Ohio 43026
WWW.FLEX-CORE.COM
sales@flex-core.com
PHONE (614) 889-6152
TECH. ASSISTANCE (614) 876-8308
FAX # (614) 876-8538

WATT/WATTHOUR TRANSDUCERS

AC WATT/WATT HOUR TRANSDUCER — *MODELS* W, W4



(W) THREE PHASE, THREE WIRE 50/60 HERTZ (TWO ELEMENT)
(W4) THREE PHASE, THREE WIRE 400 HERTZ (TWO ELEMENT)

INPUTS		F.S. WATTS	F.S. COUNTS PER HR	STANDARD OUTPUTS MODEL W or W4-						
VOLTS	AMPS			0-±1mAdc*	0-±1mAdc	0-±10Vdc*	0-±10Vdc	0-±5Vdc*	0-±5Vdc	4-20mAdc
0-150	0-1	200	200	120A	120B	120C	120D	120CX5	120X5	120E
	0-5	1K	1000	004A	004B	004C	004D	004CX5	004X5	004E
	0-10	2K	2000	013A	013B	013C	013D	013CX5	013X5	013E
	0-15	3K	3000	022A	022B	022C	022D	022CX5	022X5	022E
	0-20	4K	4000	112A	112B	112C	112D	112CX5	112X5	112E
	0-25	5K	5000	123A	123B	123C	123D	123CX5	123X5	123E
0-300	0-1	400	400	121A	121B	121C	121D	121CX5	121X5	121E
	0-5	2K	2000	005A	005B	005C	005D	005CX5	005X5	005E
	0-10	4K	4000	014A	014B	014C	014D	014CX5	014X5	014E
	0-15	6K	6000	023A	023B	023C	023D	023CX5	023X5	023E
	0-20	8K	8000	113A	113B	113C	113D	113CX5	113X5	113E
	0-25	10K	10000	124A	124B	124C	124D	124CX5	124X5	124E
0-600	0-1	800	800	122A	122B	122C	122D	122CX5	122X5	122E
	0-5	4K	4000	006A	006B	006C	006D	006CX5	006X5	006E
	0-10	8K	8000	015A	015B	015C	015D	015CX5	015X5	015E
	0-15	12K	12000	024A	024B	024C	024D	024CX5	024X5	024E
	0-20	16K	1600	114A	114B	114C	114D	114CX5	114X5	114E

Highlighted models, (5A), can be used with current transformers.
*Denotes self-powered unit, limiting input voltage ranges to:
103-135 for 150V models
215-280 for 300V models
395-550 for 600V models
All others require 103-135Vac instrument power, (50-400Hz)
150V models may be used with single-phase, three wire, 120V/240V Edison systems.
Optional 230Vac instrument power-Add suffix **"-22"** to part number.

400 HERTZ MODELS
To order for use on 400Hz application, substitute **"W4"** in part number.

CUSTOM COUNT RATES, OPEN COLLECTOR WH OUTPUT AND TTL OUTPUTS AVAILABLE - CONSULT FACTORY

OPTION "V" - PROGRAMMABLE PULSES/HOUR

Add suffix **"Y27"** for use on zero-crossing SCR controllers
NOTE: This option is not available for self-powered models

FULL SCALE OUTPUT USING CURRENT TRANSFORMERS/MODEL W AND W4 WATT/WATTHOUR TRANSDUCERS

MODEL NO. (EXAMPLE) W/W4	F.S. WATTS FROM ABOVE	CURRENT TRANSFORMER RATIO (EXAMPLE)	FULL SCALE WATTS	COUNTS PER HR FROM ABOVE	WH PER COUNT
-004	1K	500/5 (100:1)	100K	1000	100
-005	2K	500/5 (100:1)	200K	2000	100
-006	4K	500/5 (100:1)	400K	4000	100

FULL SCALE OUTPUT USING CURRENT AND POTENTIAL TRANSFORMERS/MODEL W AND W4 WATT/WATTHOUR TRANSDUCERS

F.S. WATTS FROM ABOVE	CURRENT TRANSFORMER RATIO (EXAMPLE)	POTENTIAL TRANSFORMER RATIO (EXAMPLE)	FULL SCALE WATTS	COUNTS PER HR FROM ABOVE	WH PER COUNT
1K	500/5 (100:1)	2400/120 (20:1)	2000K	1000	2000

SPECIFICATIONS

INPUT

Voltage ..... See Tables
Current ..... See Tables
Frequency Range ..... W ..... 48 to 70Hz
W4 ..... 400Hz
Power Factor ..... Any
Response (Transient 90%) ..... < 100µs
Burden
Voltage and Current 1.25VA/phase
Output Amplifier ..... 2 Watts
Current Overload (Continuous) ..... 1-10A ..... 2 X F.S.
15A, 20A, 25A ..... F.S.
Dielectric Test....(Input/Output/Case) ..... 1500Vac (RMS)
Surge ..... Withstands IEEE SWC test
Instrument Power ..... 103-135Vac, 50-400 Hz, 5VA
"-22" Option ..... 230Vac, 50/60Hz, ±10%
Self Powered ..... Inst. Power Not Required

OUTPUT

ACCURACY ..... ± 0.5% F.S.
Includes combined effects of power factor, linearity and repeatability.
WH Relay ..... N/O SPST; 150Vac, 0.5A Rated
Contact Closure Period 200ms
Analog Output Ripple ..... < 1% F.S.
Output Loading (Ω)
4 - 20mAdc 0-500
0 - ±1mAdc 0-10K
0 - ±10Vdc ..... 2K min.
0 - ±5Vdc ..... 2K min.
Response Time....(90%) 250ms
Suffix **"Y27"** (for use on zero-crossing SCR controllers) ...5s
Note: This option is not available on self-powered models.
Field Adjustable Cal. ..... ± 10%
Temperature Range ..... -10°C to +60°C
Temperature Effect ..... ±1.0% of Rdg., ±0.1% F.S. Output
Optional 5V Pulse ..... TTL output for watt hours, 5Vdc pulse
add suffix **"-T"** to part number.

FLEX-CORE®
Div. Morlan & Associates, Inc.
4970 Scioto Darby Rd. Hilliard, Ohio 43026
WWW.FLEX-CORE.COM
sales@flex-core.com
PHONE (614) 889-6152
TECH. ASSISTANCE (614) 876-8308
FAX # (614) 876-8538

WATT/WATTHOUR TRANSDUCERS

AC WATT/WATT HOUR TRANSDUCER *MODELS* W, W4



(W) THREE PHASE, FOUR WIRE 50/60 HERTZ (THREE ELEMENT)
(W4) THREE PHASE, FOUR WIRE 400 HERTZ (THREE ELEMENT)

INPUTS		F.S. WATTS	F.S. COUNTS PER HR	STANDARD OUTPUTS MODEL W- or W4-						
VOLTS	AMPS			0-±1mAdc*	0-±1mAdc	0-±10Vdc*	0-±10Vdc	0-±5Vdc*	0-±5Vdc	4-20mAdc
0-150 L-N	0-1	300	300	125A	125B	125C	125D	125CX5	125X5	125E
	0-5	1.5K	1500	007A	007B	007C	007D	007CX5	007X5	007E
	0-5	1.5K	1500	7.5A	7.5B	7.5C	7.5D	7.5CX5	7.5X5	7.5E
	0-10	3K	3000	016A	016B	016C	016D	016CX5	016X5	016E
	0-15	4.5K	4500	025A	025B	025C	025D	025CX5	025X5	025E
	0-20	6K	6000	115A	115B	115C	115D	115CX5	115X5	115E
	0-25	7.5K	7500	127A	127B	127C	127D	127CX5	127X5	127E
0-300 L-N	0-1	600	600	126A	126B	126C	126D	126CX5	126X5	126E
	0-5	3K	3000	008A	008B	008C	008D	008CX5	008X5	008E
	0-5	3K	3000	8.5A	8.5B	8.5C	8.5D	8.5CX5	8.5X5	8.5E
	0-10	6K	6000	017A	017B	017C	017D	017CX5	017X5	017E
	0-15	9K	9000	026A	026B	026C	026D	026CX5	026X5	026E
	0-20	12K	12000	116A	116B	116C	116D	116CX5	116X5	116E
	0-25	15K	1500	128A	128B	128C	128D	128CX5	128X5	128E

Highlighted models, (5A), can be used with current transformers.
*Denotes self-powered unit, limiting input voltage ranges to:
103-135 for 150V models
215-280 for 300V models
395-550 for 600V models

All others require 103-135Vac instrument power, (50-400Hz)
Optional 230Vac instrument power-Add suffix "**-22**" to part number.
Add suffix **"Y27"** for use on zero-crossing SCR controllers
NOTE: This option is not available for self-powered models

**CUSTOM COUNT RATES,
OPEN COLLECTOR WH OUTPUT AND TTL OUTPUTS
AVAILABLE - CONSULT FACTORY**

400 HERTZ MODELS
To order for use on 400Hz application, substitute "**W4**" in part number.

ORDERING INFORMATION
Example: Self-Powered,
Three Phase- Four Wire, 120V, 5A Input
with 0-5Vdc Output Proportional to 0-1500 Watts,
TTL Pulse Output for Watthours,
each Pulse Proportional to 1.0 Watthour.
W-007CX5-T

FULL SCALE OUTPUT USING CURRENT TRANSFORMERS/MODEL W AND W4 WATT/WATTHOUR TRANSDUCERS

MODEL NO. (EXAMPLE) W	F.S. WATTS FROM ABOVE	CURRENT TRANSFORMER RATIO (EXAMPLE)	FULL SCALE WATTS	COUNTS PER HR FROM ABOVE	WH PER COUNT
-007	1500	500/5 (100:1)	150,000	1500	100
-008	3000	500/5 (100:1)	300,000	3000	100

FULL SCALE OUTPUT USING CURRENT AND POTENTIAL TRANSFORMERS/MODEL W AND W4 WATT/WATTHOUR TRANSDUCERS

F.S. WATTS FROM ABOVE	CURRENT TRANSFORMER RATIO (EXAMPLE)	POTENTIAL TRANSFORMER RATIO (EXAMPLE)	FULL SCALE WATTS	COUNTS PER HR FROM ABOVE	WH PER COUNT
1500	500/5 (100:1)	2400/120 (20:1)	3,000,000	1500	2000

SPECIFICATIONS

INPUT

Voltage ..... See Tables
Current ..... See Tables
Frequency Range ..... W ..... 48 to 70Hz
W4 ..... 400Hz
Power Factor ..... Any
Response (Transient 90%) ..... < 100µs
Burden
Voltage and Current 1.25VA/phase
Output amplifier ..... 2 Watts
Current Overload (Continuous) ..... 2 X F.S.
15A, 20A, 25A ..... F.S.
Dielectric Test....(Input/Output/Case) ..... 1500Vac (RMS)
Surge ..... Withstands IEEE SWC test
Instrument Power 103-135Vac, 50-400Hz, 5VA
"**-22**" Option ..... 230Vac, 50/60Hz, ±10%
Self Powered ..... Inst. Power Not Required

OUTPUT

ACCURACY ..... ± 0.5% F.S.
Includes combined effects of power factor, linearity and repeatability .
WH Relay ..... N/O SPST; 150Vac, 0.5A Rated
Contact Closure Period 200ms
Analog Output Ripple ..... < 1% F.S.
Output Loading (Ω)
4 - 20mAdc 0-500
0 - ±1mAdc 0-10K
0 - ±10Vdc ..... 2K min.
0 - ±5Vdc ..... 2K min.
Response Time....(90%) 250ms
Suffix **"Y27"** (for use on zero-crossing SCR controllers) ...5s
Note: This option is not available on self-powered models.
Field Adjustable Cal. ..... ± 10%
Temperature Range ..... -10°C to +60°C
Temperature Effect ..... ±1.0% of Rdg., ±0.1% F.S. Output
Optional 5V Pulse ..... TTL output for watthours 5Vdc pulse
add suffix **"-T"** to part number

FLEX-CORE®
Div. Morlan & Associates, Inc.
4970 Scioto Darby Rd. Hilliard, Ohio 43026
WWW.FLEX-CORE.COM
sales@flex-core.com
PHONE (614) 889-6152
TECH. ASSISTANCE (614) 876-8308
FAX # (614) 876-8538

WATT/WATTHOUR TRANSDUCERS

CONNECTION DIAGRAMS — *MODELS* W, W4

SINGLE PHASE CONNECTIONS

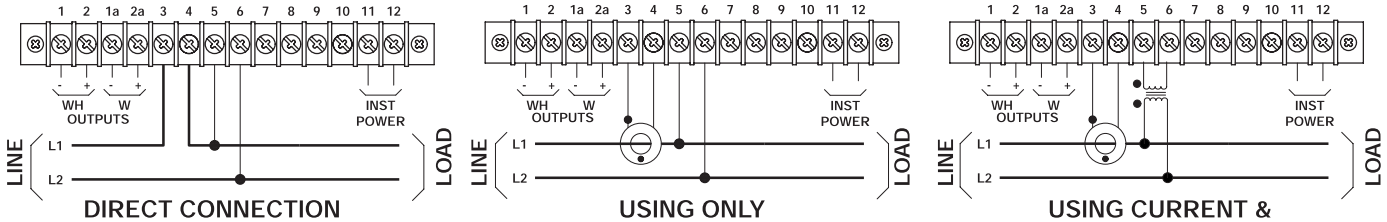

DIRECT CONNECTION — USING ONLY CURRENT TRANSFORMERS — USING CURRENT & POTENTIAL TRANSFORMERS

THREE-PHASE,THREE-WIRE CONNECTIONS

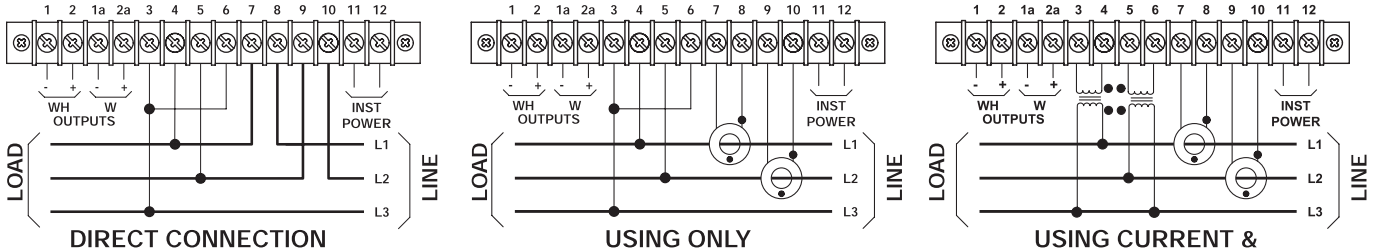

DIRECT CONNECTION — USING ONLY CURRENT TRANSFORMERS — USING CURRENT & POTENTIAL TRANSFORMERS

THREE-PHASE,FOUR-WIRE CONNECTIONS

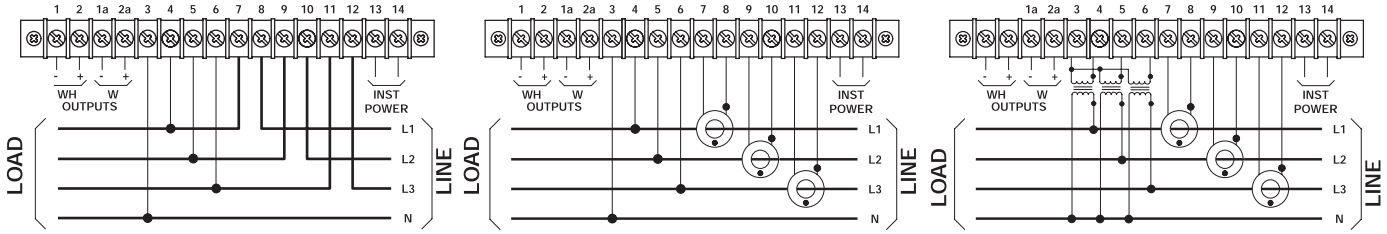

DIRECT CONNECTION — USING ONLY CURRENT TRANSFORMERS — USING CURRENT & POTENTIAL TRANSFORMERS

EDISON CIRCUIT 1 PHASE, 3-WIRE (120/240)

(W-004) 5A
(W-013) 10A
(W-022) 15A
(W-112) 20A

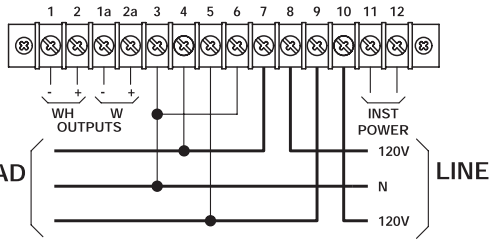

EDISON SYSTEM (≤ 20 AMP)

(W-004 Only)

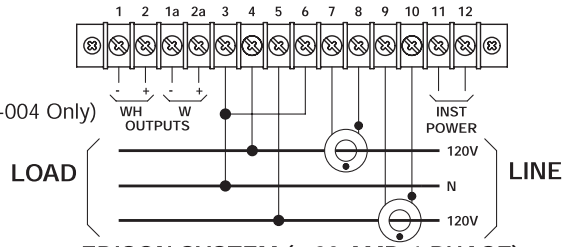

EDISON SYSTEM (> 20 AMP, 1 PHASE)

CASE DIMENSIONS

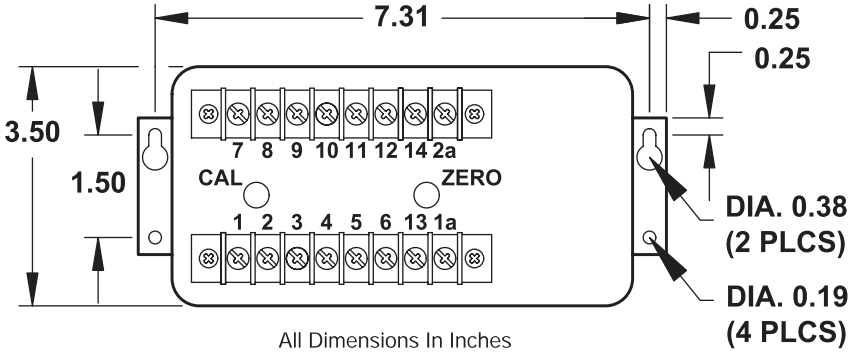

All Dimensions In Inches

CASE HEIGHT 5.50"
1PH 2W 3.0 Lbs.
3PH 3W 3.7 Lbs.
3PH 4W 4.5 Lbs.

FLEX-CORE®
Div. Morlan & Associates, Inc.
4970 Scioto Darby Rd. Hilliard, Ohio 43026
WWW.FLEX-CORE.COM
sales@flex-core.com
PHONE (614) 889-6152
TECH. ASSISTANCE (614) 876-8308
FAX # (614) 876-8538

WATT/WATTHOUR TRANSDUCERS

PRECISION AC WATT/WATTHOUR TRANSDUCER *MODEL* AGH

UL LISTED, ACCURATE TO 0.2% OF READING

FEATURES

- Accurate regardless of variations in voltage,current, power factor, or load.
- Dual outputs, analog signal proportional to instantaneous Watts, Relay closure proportional to Watthours.
- Calibrated with standards traceable to **NIST**.

LISTED 87 X 9
Energy Management
Equipment Accessory

APPLICATIONS

- Designed for applications which require UL listed devices.
- Integration into energy management systems, or a variety of sub-metering applications.
- Measurement using direct-connection, current and/or potential transformers.

c UL us
LISTED
E500653



INPUTS		F.S. WATTS	PHASE	NO. OF ELEMENTS	STANDARD OUTPUTS MODEL AGH-			WATTHOUR COUNTS/ HOUR
AC VOLTS	AC AMPS				0-±1mAdc	0-±10Vdc	4-20mAdc	
0-150	0-5	500	1P-2W	1	001B	001D	001E	500
0-300	0-5	1000	1P-2W	1	002B	002D	002E	1000
0-600	0-5	2000	1P-2W	1	003B	003D	003E	2000
0-150	0-5	1000	3P-3W	2	004B	004D	004E	1000
0-300	0-5	2000	3P-3W	2	005B	005D	005E	2000
0-600	0-5	4000	3P-3W	2	006B	006D	006E	4000
0-150 L-N	0-5	1500	3P-4W	3	007B	007D	007E	1500
0-300 L-N	0-5	3000	3P-4W	3	008B	008D	008E	3000
0-150 L-N	0-5	1500	3P-4W	2 1/2	007.5B	007.5D	007.5E	1500
0-300 L-N	0-5	3000	3P-4W	2 1/2	008.5B	008.5D	008.5E	3000

To calculate full scale Watts when using potential and/or current transformers:
a = initial transducer calibration (from table above F.S. Watts)
b = current transformer ratio (e.g. 100:5, or 20)
c = potential transformer ratio (e.g. 600:120, or 5)
F.S. WATTS = a x b x c
NOTE: UL recognized current transformers available from factory

ORDERING INFORMATION

Example: Three Phase,Four Wire, Three Element, 120V, 5A Input with ±10Vdc Output, Proportional to ±1500 Watts. Relay Output for Watthours, each Closure Proportional to 1.0 Wh.
AGH-007D

SPECIFICATIONS

INPUT

Voltage ..... See Table
Current 0-5Aac
Frequency Range ..... 58 to 62Hz
Power Factor ..... Any
Burden
  Voltage ..... <0.1VA
  Current ..... <0.25VA
Overload
  Voltage (cont) ..... 150Vac Range 175Vac
  300Vac Range 350Vac
  600Vac Range 600Vac
  Current (cont) ..... 2 X F.S.
  (transient) ..... 50Aac (10 sec./hr)
  250Aac (1sec./hr)
Dielectric Test (Input/Output/Case)
  (150Vac & 300Vac) 1800Vac
  (600Vac) 2200Vac
Surge ..... Withstands IEEE SWC test

OUTPUT

WH Relay ..... N/O SPST; 120Vac,0.5A Rated
  contact closure period 200ms
Closure Calibration (Std.) ..... 1 Watthour/closure
Analog Output Ripple ..... < 0.5% F.S.
Analog Output Loading (Ω)
  0-1mAdc 0-10K
  0-10Vdc ..... 2K min.
  4-20mAdc ..... 0 to 500
Response Time..... (99%) ..... < 400ms
ACCURACY ..... ± 0.2% Rdg. ..... ± 0.05% F.S.
Includes combined effects of voltage, current, load and power factor.
Temperature Effect ..... (-20° to +60°C) ..... ± 0.005%/°C
Instrument Power 90-135Vac, 60Hz, 7.5VA
Weight ..... 3 Lbs.

FLEX-CORE®
Div. Morlan & Associates, Inc.
4970 Scioto Darby Rd. Hilliard, Ohio 43026
WWW.FLEX-CORE.COM
sales@flex-core.com
PHONE (614) 889-6152
TECH. ASSISTANCE (614) 876-8308
FAX # (614) 876-8538

WATT/WATTHOUR TRANSDUCERS

CONNECTION DIAGRAMS — *MODEL* AGH

SINGLE PHASE CONNECTIONS (ONE ELEMENT)

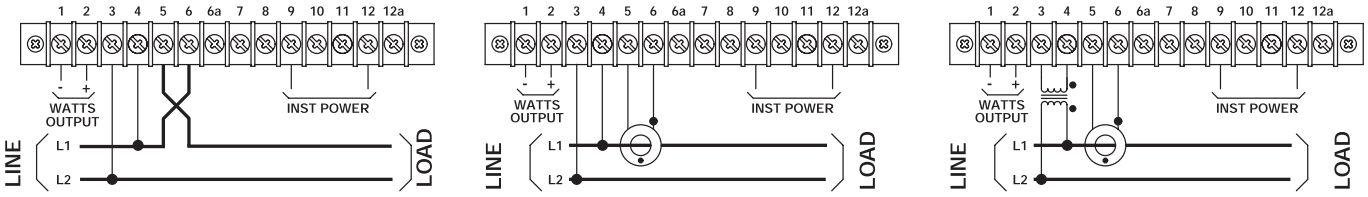

DIRECT CONNECTION | USING ONLY CURRENT TRANSFORMERS | USING CURRENT & POTENTIAL TRANSFORMERS

THREE-PHASE,THREE-WIRE CONNECTIONS (TWO ELEMENT)

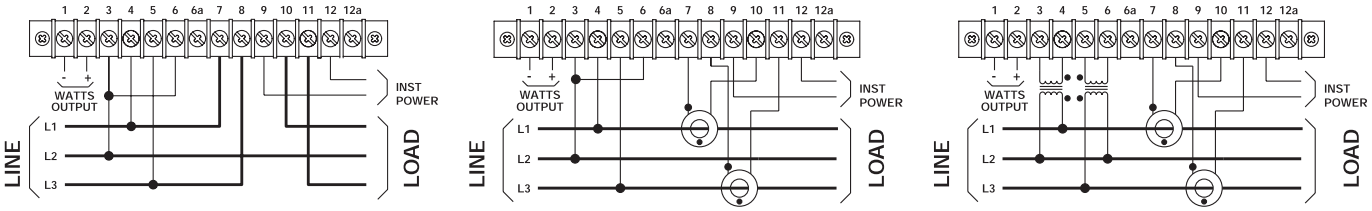

DIRECT CONNECTION | USING ONLY CURRENT TRANSFORMERS | USING CURRENT & POTENTIAL TRANSFORMERS

THREE-PHASE,FOUR-WIRE CONNECTIONS (2 1/2 ELEMENT)

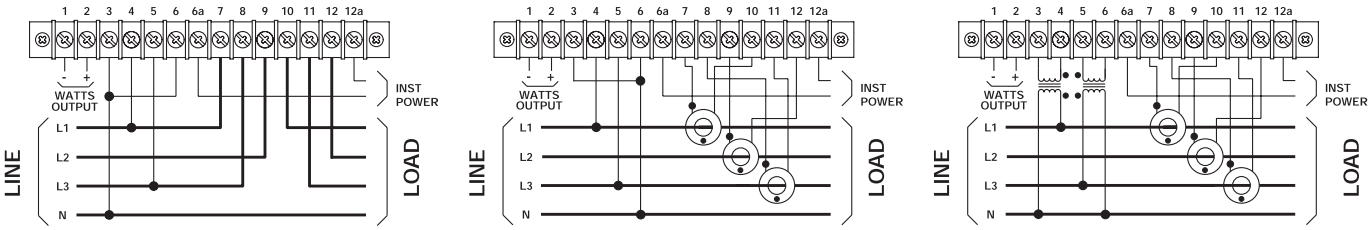

DIRECT CONNECTION | USING ONLY CURRENT TRANSFORMERS | USING CURRENT & POTENTIAL TRANSFORMERS

THREE-PHASE,FOUR-WIRE CONNECTIONS (THREE ELEMENT)

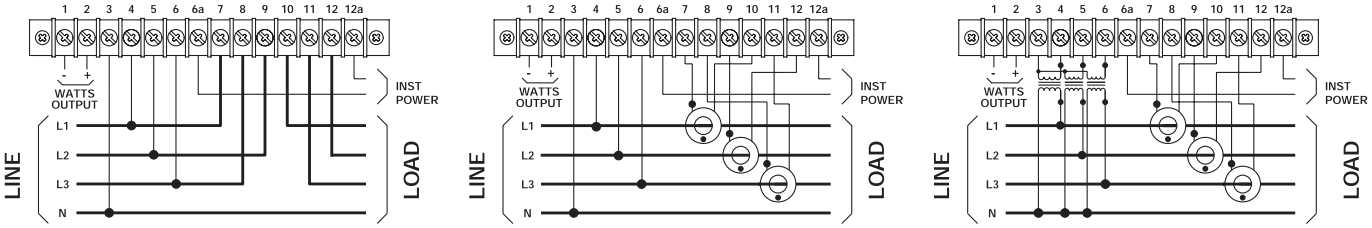

DIRECT CONNECTION | USING ONLY CURRENT TRANSFORMERS | USING CURRENT & POTENTIAL TRANSFORMERS

CASE DIMENSIONS

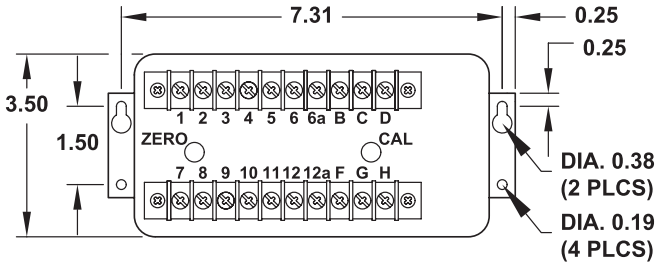

All Dimensions In Inches

CASE HEIGHT 5.88"
1PH 2W 2.9 Lbs.
3PH 3W 3.3 Lbs.
3PH 4W 3.8 Lbs.

WATTHOUR OUTPUT CONNECTIONS

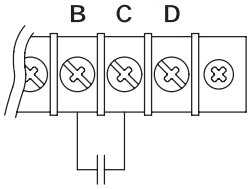

STANDARD OUTPUT
SPST RELAY

FLEX-CORE®
Div. Morlan & Associates, Inc.
4970 Scioto Darby Rd. Hilliard, Ohio 43026
WWW.FLEX-CORE.COM
sales@flex-core.com
PHONE (614) 889-6152
TECH. ASSISTANCE (614) 876-8308
FAX # (614) 876-8538

WATTHOUR TRANSDUCERS

WATTHOUR METER WITH INTEGRATED CT — *MODEL* SWH

FEATURES

- Easy to install split core design
- LED indications of proper installation/operation
- Form A solid state contact closure pulse output
- Single phase watt hour transducer with integrated current transformer

APPLICATIONS

- Energy Allocations
- Sub Metering
- Process Control



VOLTS	AMPS	CATALOG NUMBER
115	0-100	SWH-1100
	0-200	SWH-1200
	0-400	SWH-1400
208/230	0-100	SWH-2100
	0-200	SWH-2200
277*	0-100	SWH-3100
	0-200	SWH-3200

*Not UL Listed

c UL us LISTED
E500652

ORDERING INFORMATION
Example: 100Aac input
for use on 208Vac L-N Voltage
SWH-2100

MODEL SWH SPECIFICATIONS

INPUT

Voltage..... See Table
Current..... See Table
Frequency Range ..... 48 - 62Hz
Power Factor..... Any
Burden
  Voltage..... <0.2VA
Overload
  Voltage..... 120% of Nominal
  Current ..... 125% of F.S.
Dielectric Test .....(Input/Output) 2250Vac
Instrument Power..... Self-powered

Consult Factory for Custom Pulse Rates

OUTPUT

LED.....Energy Rate and Direction Indicator
  Green = Forward Power
  Red = Reverse Power
  Blinks at same rate as WH pulse
WH Pulse..... Type ..... Form A, Solid State Contact
  30V peak, 100mA max.
  Scaling..... 10Wh per pulse
  Duration 200ms
  Forward Power..... Normally open with contact closing
  Reverse Power... Normally closed with contact opening
Accuracy ..... ±1.0% F.S.
Temperature Effect ..... (-20°C to +65°C)..... ±1.0% F.S.
Weight ..... 1.0 Lb.

CASE DIMENSIONS

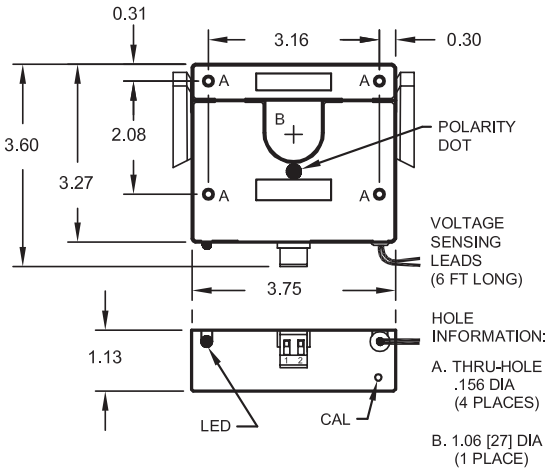

All Dimensions In Inches

CONNECTION DIAGRAMS

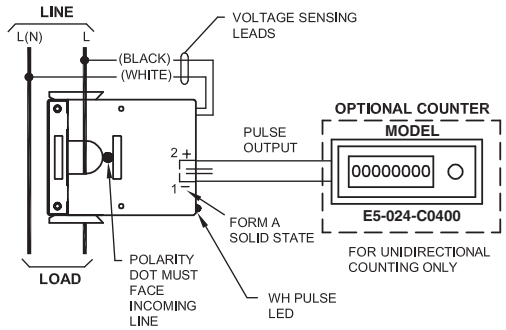

FLEX-CORE®
Div. Morlan & Associates, Inc.
4970 Scioto Darby Rd. Hilliard, Ohio 43026
WWW.FLEX-CORE.COM
sales@flex-core.com
PHONE (614) 889-6152
TECH. ASSISTANCE (614) 876-8308
FAX # (614) 876-8538

WATT/WH or VAR/VARHR TRANSDUCERS

WATT/WATTHOUR OR VAR/VARHOUR TRANSDUCER *MODELS* GH, VGH

ACCURATE TO 0.2% OF READING

FEATURES

- Accurate regardless of variations in voltage,current, power factor, or load.
- Available with 1, 2, 2 1/2, or 3 element configurations. Bi-directional Watt and Watthour outputs available. (GH) Bi-directional Var and Varhour outputs available. (VGH)
- Accuracy maintained over wide temperature range, calibration traceable to **NIST**.

APPLICATIONS

- Integration into energy management systems, or a variety of sub-metering applications.
- Measurement using direct-connection, potential and/or current transformers.



SINGLE PHASE, TWO WIRE MODELS WITH INTERNAL SENSOR (ONE ELEMENT)

INPUTS		F.S. WATTS or VARS	STANDARD OUTPUTS MODELS GH- OR VGH-					F.S. COUNTS/ HOUR	WH RELAY OPTIONS (ADD SUFFIX)			
AC VOLTS	AC AMPS		±1mAdc	±10Vdc	4-20mAdc	4-12-20mAdc	0-±5Vdc		"-T"	"-R"	"-H"	"-K"
0-150	0-1	100	103B	103D	103E	103EM	103X5	100	Relay is replaced with 5Vdc, TTL compatible pulse.	A second relay or pulse is provided to allow bi-directional measurement	Form C (SPDT) solid state relay 0.1A	Form C (SPDT) solid state relay operating in "KYZ" format (50% duty cycle) 0.1A
	0-5	500	001B	001D	001E	001EM	001X5	500				
	0-10	1000	010B	010D	010E	010EM	010X5	1000				
	0-20	2000	019B	019D	019E	019EM	019X5	2000				
0-300	0-1	200	104B	104D	104E	104EM	104X5	200				
	0-5	1000	002B	002D	002E	002EM	002X5	1000				
	0-10	2000	011B	011D	011E	011EM	011X5	2000				
	0-20	4000	020B	020D	020E	020EM	020X5	4000				
0-600	0-1	500	105B	105D	105E	105EM	105X5	500				
	0-5	2000	003B	003D	003E	003EM	003X5	2000				
	0-10	4000	012B	012D	012E	012EM	012X5	4000				
	0-20	8000	021B	021D	021E	021EM	021X5	8000				

Highlighted models, (5A), can be used with current transformers. To calculate unit scaling when using current or potential transformers, multiply the base unit scaling by the CT or PT ratio.

Example:
GH-001D used with 100:5 CTs.
CT ratio = 100/5 = 20
F.S. Watt input = 500W x 20 = 10,000W (10kW)
(0-10kW input = 0 - 10Vac output)
WH relay scaling = 1WH/Cnt x 20 = 20WH/cnt.

All std. units require 95-135Vac instrument power, (60Hz)
Optional self-powered models-Add suffix "-**G**"
Optional 230Vac instrument power - Add suffix **"-22"**
Input voltage ranges limited to:
95-135 for 150V models
200-280 for 300V models
380-550 for 600V models
50 HERTZ MODELS-ADD SUFFIX "-50" TO PART NUMBER.

Standard Relay is a Form A, SPST

ORDERING INFORMATION

Example: Single-Phase, 120V, 5A Input with ±10Vdc Output Proportional to ±500 Watts, TTL Pulse Output for Watthours, Each Pulse Proportional to 1.0 Watthour.

GH-001D-T

ORDERING INFORMATION

Example: Single-Phase, 120V, 5A Input with ±10Vdc Output Proportional to ±500 Vars, Self-Powered, 1.0 Varhour per Relay Count.

VGH-001DG

CUSTOM WATTHOUR OR VARHOUR COUNT RATES AVAILABLE - CONSULT FACTORY

THREE PHASE, THREE WIRE MODELS WITH INTERNAL SENSOR (TWO ELEMENT)

INPUTS		F.S. WATTS or VARS	STANDARD OUTPUTS MODELS GH- OR VGH-					F.S. COUNTS/ HOUR	WH RELAY OPTIONS (ADD SUFFIX)			
AC VOLTS	AC AMPS		±1mAdc	±10Vdc	4-20mAdc	4-12-20mAdc	0-±5Vdc		"-T"	"-R"	"-H"	"-K"
0-150	0-1	200	120B	120D	120E	120EM	120X5	200	Relay is replaced with 5Vdc, TTL compatible pulse.	A second relay or pulse is provided to allow bi-directional measurement	Form C (SPDT) solid state relay 0.1A	Form C (SPDT) solid state relay operating in "KYZ" format (50% duty cycle) 0.1A
	0-5	1000	004B	004D	004E	004EM	004X5	1000				
	0-10	2000	013B	013D	013E	013EM	013X5	2000				
	0-20	4000	022B	022D	022E	022EM	022X5	4000				
0-300	0-1	400	121B	121D	121E	121EM	121X5	400				
	0-5	2000	005B	005D	005E	005EM	005X5	2000				
	0-10	4000	014B	014D	014E	014EM	014X5	4000				
	0-20	8000	023B	023D	023E	023EM	023X5	8000				
0-600	0-1	800	122B	122D	122E	122EM	122X5	800				
	0-5	4000	006B	006D	006E	006EM	006X5	4000				
	0-10	8000	015B	015D	015E	015EM	015X5	8000				
	0-20	16000	024B	024D	024E	024EM	024X5	1600				

FLEX-CORE®
Div. Morlan & Associates, Inc.
4970 Scioto Darby Rd. Hilliard, Ohio 43026
WWW.FLEX-CORE.COM
sales@flex-core.com
PHONE (614) 889-6152
TECH. ASSISTANCE (614) 876-8308
FAX # (614) 876-8538

WATT/WH or VAR/VARHR TRANSDUCERS

WATT/WATTHOUR OR VAR/VARHOUR TRANSDUCER *MODELS* GH, VGH

ACCURATE TO 0.2% OF READING



THREE PHASE, FOUR WIRE MODELS WITH INTERNAL SENSOR (THREE ELEMENT)

INPUTS		F.S. WATTS or VARS	STANDARD OUTPUTS MODEL GH- OR VGH-					F.S. COUNTS/ HOUR	WH RELAY OPTIONS (ADD SUFFIX)			
AC VOLTS	AC AMPS		±1mAdc	±10Vdc	4-20mAdc	4-12-20mAdc	0-±5Vdc		"-T"	"-R"	"-H"	"-K"
0-150 L-N	0-1	300	125B	125D	125E	125EM	125X5	300	Relay is replaced with 5Vdc, TTL compatible pulse.	A second relay or pulse is provided to allow bi-directional measurement	Form C (SPDT) solid state relay 0.1A	Form C (SPDT) solid state relay operating in "KYZ" format (50% duty cycle) 0.1A
	0-5	1500	007B	007D	007E	007EM	007X5	1500				
	0-5	1500	7.5B	7.5D	7.5E	7.5EM	7.5X5	1500				
	0-10	3000	016B	016D	016E	016EM	016X5	3000				
	0-20	6000	025B	025D	025E	025EM	025X5	6000				
0-300 L-N	0-1	600	126B	126D	126E	126EM	126X5	600				
	0-5	3000	008B	008D	008E	008EM	008X5	3000				
	0-5	3000	8.5B	8.5D	8.5E	8.5EM	8.5X5	3000				
	0-10	6000	017B	017D	017E	017EM	017X5	6000				
	0-20	12000	026B	026D	026E	026EM	026X5	12000				
Part Numbers 7.5 and 8.5 denote $2^{1/2}$ Element Units												Standard Relay is Form A, SPST

Highlighted models, (5A), can be used with current transformers. To calculate unit scaling when using current or potential transformers, multiply the base unit scaling by the CT or PT ratio.

Example:
GH-001D used with 100:5 CTs.
CT ratio = 100/5 = 20
F.S. Watt input = 500W x 20 = 10,000W (10kW)
(0-10kW input = 0 - 10V output)
WH relay scaling = 1WH/Cnt x 20 = 20WH/cnt.
All std. units require 95-135Vac instrument power, (60Hz)
Optional self-powered models-Add suffix "-**G**"
Optional 230Vac instrument power - Add suffix "**-22**"
Input voltage ranges limited to:
95-135 for 150V models
200-280 for 300V models
380-550 for 600V models

ORDERING INFORMATION

Example: Three-Phase, Four Wire 120V, 5A Input with ± 10Vdc Output Proportional to ± 1500 Vars, TTL Pulse Output for Var Hours, each Pulse Proportional to 1.0 Var Hour.
VGH-007D-T

50 HERTZ MODELS Add suffix "**-50**" to part number.

CUSTOM WATT HOUR OR VAR HOUR COUNT RATES AVAILABLE - CONSULT FACTORY

SPECIFICATIONS

INPUT

Voltage ..... See Tables
Current ..... See Tables
Frequency Range ..... GH ..... 58-62Hz .... VGH 60Hz
Option "50" ..... GH ..... 48-52Hz .... VGH 50Hz
Power Factor ..... Any
Burden
Voltage 0.1VA/phase
Current 0.28VA/phase
Overload
Voltage (cont.) ..... 150V Range 175V
300V Range 350V
600V Range 600V
Current (cont.) ..... 5A Range ..... 2 X F.S.
10A Range ..... 2 X F.S.
20A Range ..... F.S.
Transient ..... All Ranges
50A ..... 10 sec./hr.
250A ..... 1 sec./hr.
Dielectric Test....(Input/Output/Case) ..... 1800Vac (RMS)
Surge ..... Withstands IEEE SWC test

OUTPUT

VGH ..... + = Lagging/ - = Leading
ACCURACY .....± 0.2% Rdg. ..... ± 0.05% F.S.
Includes combined effects of voltage, current, load and power factor
Relay .....Form A (SPST, N.O.) 120Vac, 0.5A
Contact closure duration 200ms
Option "T"..... Pulse ..... 5V TTL Compatible Pulse
Pulse duration 200ms
Option "H" .... Form C (SPDT) 120Vac, 0.1A
Contact closure duration 200ms
Option "K" .... Form C (KYZ) 120Vac, 0.1A
Contact closure duration ..... 50% duty cycle
Analog Output Ripple ..... < 0.5% F.S.
Output Loading (Ω)
±1mAdc 0-10K
±10Vdc ..... 2K min.
4-20mAdc 0-500
Response Time....(99%) ..... <400ms
Field Adjustable Cal. ..... ± 2% min.
Temperature Effect....(-20°C to +60°C) ..... +0.005%/°C
Operating Humidity ..... 0-95% non-condensing
Instrument Power (std.) ..... 115Vac, ±15%, 50/60Hz, 7.5VA
"**-22**" Option ..... 230Vac, ±15%, 50/60Hz, 7.5VA

FLEX-CORE®
Div. Morlan & Associates, Inc.
4970 Scioto Darby Rd. Hilliard, Ohio 43026
WWW.FLEX-CORE.COM
sales@flex-core.com
PHONE (614) 889-6152
TECH. ASSISTANCE (614) 876-8308
FAX # (614) 876-8538

WATT/WH or VAR/VARHR TRANSDUCERS

CONNECTION DIAGRAMS — *MODELS* GH, VGH

SINGLE PHASE CONNECTIONS (ONE ELEMENT)

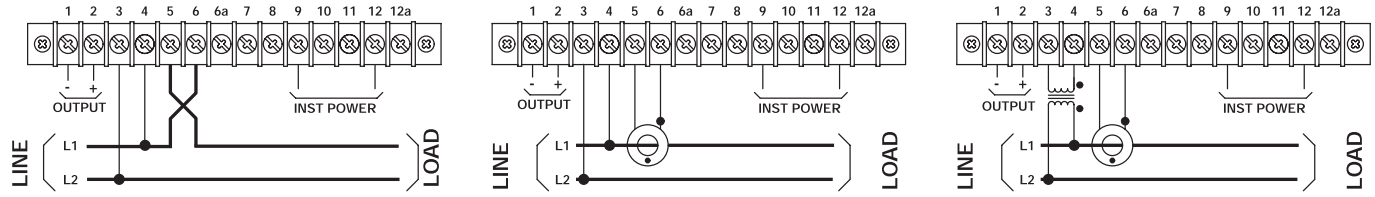

DIRECT CONNECTION | USING ONLY CURRENT TRANSFORMERS | USING CURRENT & POTENTIAL TRANSFORMERS

THREE-PHASE,THREE-WIRE CONNECTIONS (TWO ELEMENT)

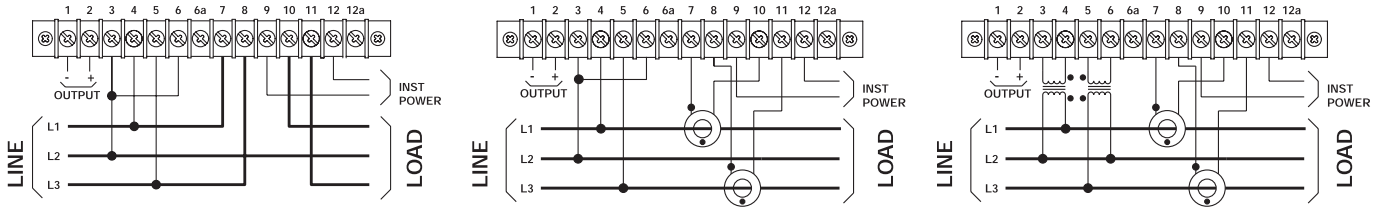

DIRECT CONNECTION | USING ONLY CURRENT TRANSFORMERS | USING CURRENT & POTENTIAL TRANSFORMERS

THREE-PHASE,FOUR-WIRE CONNECTIONS (2 1/2 ELEMENT)

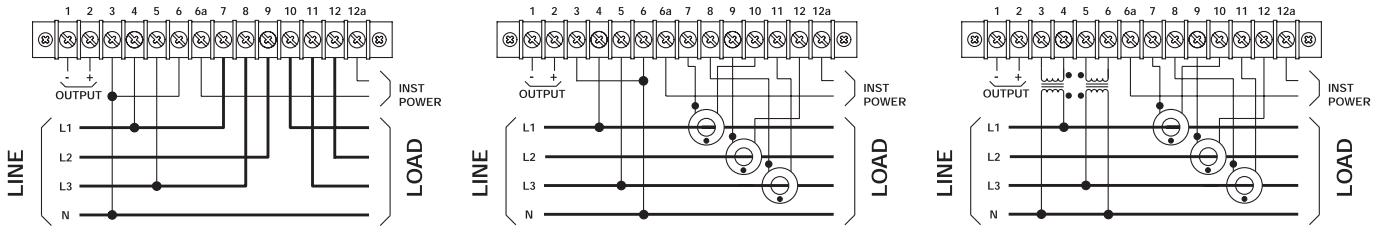

DIRECT CONNECTION | USING ONLY CURRENT TRANSFORMERS | USING CURRENT & POTENTIAL TRANSFORMERS

THREE-PHASE,FOUR-WIRE CONNECTIONS (THREE ELEMENT)

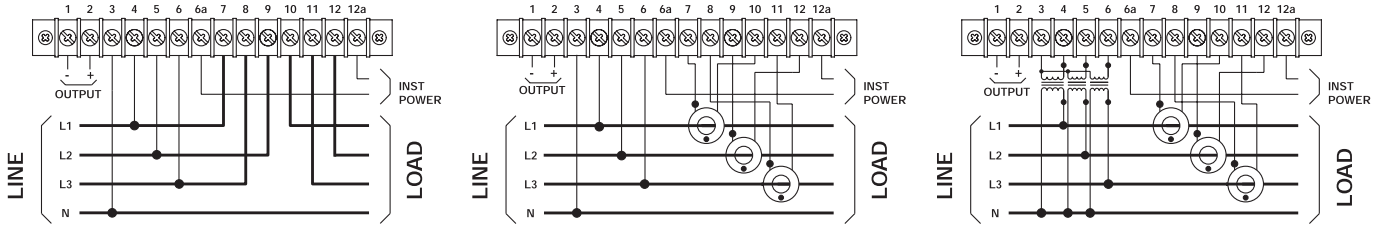

DIRECT CONNECTION | USING ONLY CURRENT TRANSFORMERS | USING CURRENT & POTENTIAL TRANSFORMERS

WATTHOUR OR VARHOUR OUTPUT CONNECTIONS

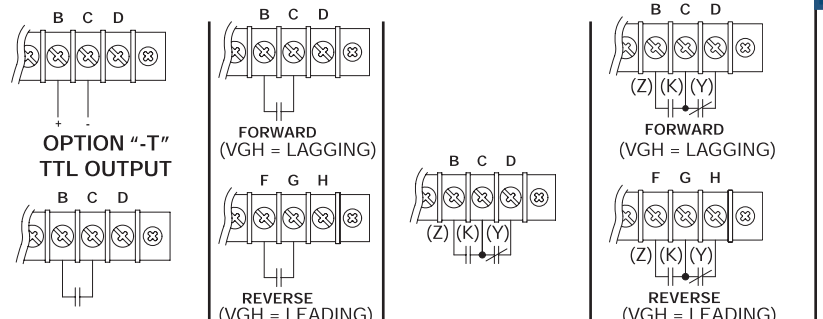

CASE DIMENSIONS

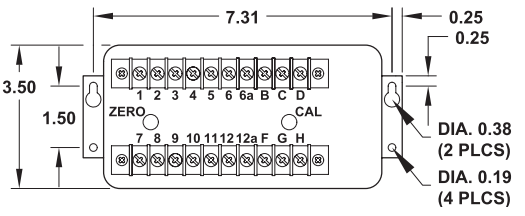

CASE HEIGHT 5.88"
1PH 2W 2.9 Lbs.
3PH 3W 3.3 Lbs.
3PH 4W 3.8 Lbs.

All Dimensions In Inches

FLEX-CORE®
Div. Morlan & Associates, Inc.
4970 Scioto Darby Rd. Hilliard, Ohio 43026

WWW.FLEX-CORE.COM
sales@flex-core.com

PHONE (614) 889-6152
TECH. ASSISTANCE (614) 876-8308
FAX # (614) 876-8538

FREQUENCY TRANSDUCER — MODEL AFT

FOR USE ON POWER FREQUENCY APPLICATIONS

FEATURES

- High accuracy over wide frequency ranges.
- Provides analog output which is proportional to the instantaneous frequency of the input signal.
- UL and CUL listed.

APPLICATIONS

- For use on any application that requires indication or recording of instantaneous frequency variations.
- Each model covers all input voltages from 3V to 575V.

INPUT FREQUENCY Hz	STANDARD OUTPUTS MODEL AFT-					
	0-1mAdc	0-10Vdc	0-5Vdc	4-20mAdc	4-20mAdc*	0-20mAdc
45-55	050-10B	050-10D	050-10X5	050-10E	050-10E2	050-10EA
55-65	060-10B	060-10D	060-10X5	060-10E	060-10E2	060-10EA
375-425	400-50B	400-50D	400-50X5	400-50E	400-50E2	400-50EA
0-10	010B	010D	010X5	010E	010E2	010EA
0-55	055B	055D	055X5	055E	055E2	055EA
0-65	065B	065D	065X5	065E	065E2	065EA
0-100	100B	100D	100X5	100E	100E2	100EA
0-425	425B	425D	425X5	425E	425E2	425EA
0-1000	1000B	1000D	1000X5	1000E	1000E2	1000EA



c UL us LISTED E500652

115Vac, 50/60Hz instrument power is required on all units.
Optional 230Vac Instrument Power - Add suffix "-22"

*** Output is loop-powered from 15-24Vdc (also requires instrument power)**
Consult factory for special frequency ranges.

ORDERING INFORMATION
Example: 55-65 Hz. Input, with 0-5Vdc Output
AFT-060-10X5

SPECIFICATIONS

INPUT

Frequency Range ..... See Table
Voltage Range 3-575V
Burden 1.25VA
Overload 575V
Dielectric Test
- Input to Output/Inst. Pwr 3250Vac
- Inst. Pwr. to Output 2200Vac
- Case to Input/Output/Inst. Pwr. 2200Vac

Instrument Power ..... 115Vac, 50/60Hz, ±15%, 15VA max.
- **"-22"** Option ..... 230Vac, 50/60Hz, ±15%, 15VA max.

OUTPUT

ACCURACY ..... ± 0.05% Rdg.....±0.05% Span
Output Loading (Ohms)
- 0-1mA 0-10K
- 10V & 5V ..... 2K min.
- 4-20mA, 0-20mA 0-500

Output Ripple ..... ±1.0% F.S.
Response Time ..... <200ms
Temperature Range ..... -20°C to +60°C
Temperature Effect ..... ±0.005%/°C

CONNECTION DIAGRAMS

MODELS WITH B, D, X5, E, EA OPTIONS

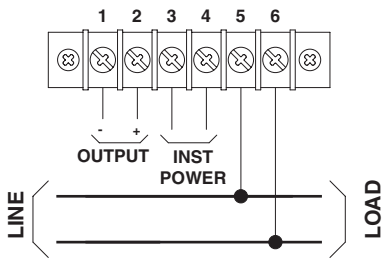

MODELS WITH E2 OPTIONS

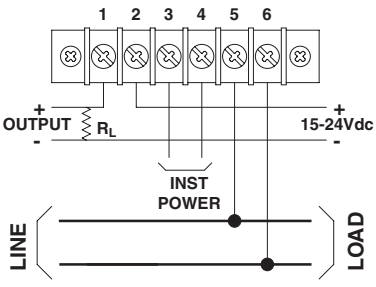

CASE DIMENSIONS

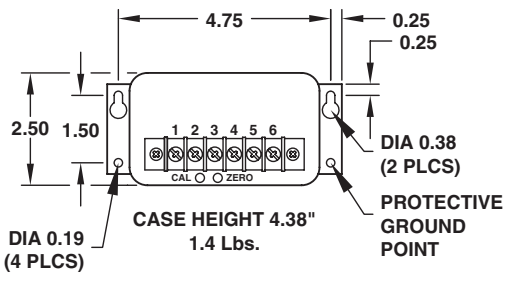

All Dimensions In Inches

FLEX-CORE®
Div. Morlan & Associates, Inc.
4970 Scioto Darby Rd. Hilliard, Ohio 43026
WWW.FLEX-CORE.COM
sales@flex-core.com
PHONE (614) 889-6152
TECH. ASSISTANCE (614) 876-8308
FAX # (614) 876-8538

PHASE ANGLE TRANSDUCERS

PHASE ANGLE TRANSDUCER *MODEL* PF5

SINGLE PHASE, THREE PHASE 50/60 HERTZ PHASE ANGLE TRANSDUCER

FEATURES

- The bipolar output of the model PF is directly proportional to the 0 to 60° leading or lagging power factor of the input signal. A leading PF is represented by a negative output signal. A lagging PF is represented by a positive output signal.

APPLICATIONS

- Provides an accurate means for calculating power factor, PF=COS (Phase angle).



SINGLE PHASE TWO WIRE MODELS

INPUT AC VOLTS LINE-TO-LINE	INPUT AC AMPS	STANDARD OUTPUTS MODEL PF5-			
		± 1mAdc	± 10Vdc	4-20mAdc*	4-12-20mAdc*
95 to 135	0.2 to 5.0	001A	001C	001E	001EM
	0.3 to 10.0	010A	010C	010E	010EM
	1.0 to 20.0	019A	019C	019E	019EM
200 to 300	0.2 to 5.0	002A	002C	002E	002EM
	0.3 to 10.0	011A	011C	011E	011EM
	1.0 to 20.0	020A	020C	020E	020EM
410 to 550	0.2 to 5.0	003A	003C	003E	003EM
	0.3 to 10.0	012A	012C	012E	012EM
	1.0 to 20.0	021A	021C	021E	021EM

Highlighted Models (5A) can be used with Current Transformers.
*4-20mA, 4-12-20mA models require 85-135Vac instrument power.
All other models are self-powered from monitored line.
4-20mA models for use **only on lagging Power Factor.**
Higher current ranges available - Consult factory

ORDERING INFORMATION
Example: Three Phase - Four Wire
277Vac, 10A Input with
+/-10Vdc Output.
PF5-014C

THREE PHASE THREE WIRE OR THREE PHASE FOUR WIRE MODELS

INPUT AC VOLTS LINE-TO-LINE	INPUT AC AMPS	STANDARD OUTPUTS MODEL PF5-			
		± 1mAdc	± 10Vdc	4-20mAdc*	4-12-20mAdc*
95 to 135	0.2 to 5.0	004A	004C	004E	004EM
	0.3 to 10.0	013A	013C	013E	013EM
	1.0 to 20.0	022A	022C	022E	022EM
200 to 300	0.2 to 5.0	005A	005C	005E	005EM
	0.3 to 10.0	014A	014C	014E	014EM
	1.0 to 20.0	023A	023C	023E	023EM
410 to 550	0.2 to 5.0	006A	006C	006E	006EM
	0.3 to 10.0	015A	015C	015E	015EM
	1.0 to 20.0	024A	024C	024E	024EM



SPECIFICATIONS

INPUT

Voltage ..... See Tables
Current ..... See Tables
Frequency Range 50-60Hz
Burden
  Voltage 2.0VA
  Current 0.4VA
Overload (cont.)
  Voltage ..... 135Vac Range 175Vac
  300Vac Range 350Vac
  550Vac Range 600Vac
  Current ..... 5Aac Range 10Aac
  10Aac Range 20Aac
  20Aac Range 30Aac
Dielectric Test....(Input/Output/Case) 1500Vac

OUTPUT

ACCURACY ..... ± 0.5% of Span
Includes combined effects of voltage, current and frequency.
Span .... (Current inp. ref. Voltage inp.) ..... +60° to 0 to -60°
  Current leads Voltage ..... Negative Output
  Current lags Voltage ..... Positive Output
Output Loading (Ω)
  ±1mAdc 0-10K
  ±10Vdc ..... 2K min.
  4-20mAdc, 4-12-20mAdc 0-500
Response Time....(90%) 400ms
Field Adjustable Cal. ..... ± 10%
Temperature Range ..... -20°C to +60°C
Temperature Effect ..... ±0.5% F.S.
Instrument Power 85-135Vac, 50-400Hz, 3.5VA
  "-22" Option ..... 230Vac, 50/60Hz, ±15%

FLEX-CORE®
Div. Morlan & Associates, Inc.
4970 Scioto Darby Rd. Hilliard, Ohio 43026
WWW.FLEX-CORE.COM
sales@flex-core.com
PHONE (614) 889-6152
TECH. ASSISTANCE (614) 876-8308
FAX # (614) 876-8538

PHASE ANGLE TRANSDUCERS

CONNECTION DIAGRAMS *MODEL* PF5

SINGLE PHASE CONNECTIONS

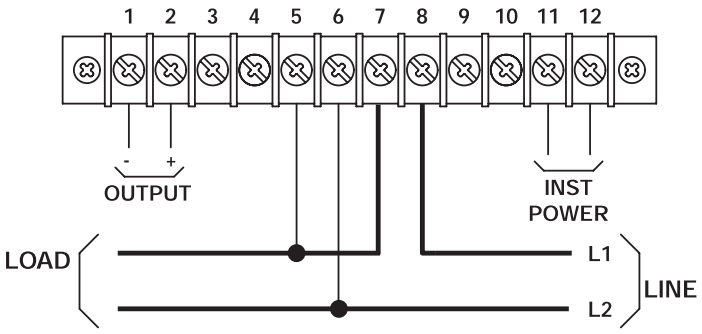

DIRECT CONNECTION

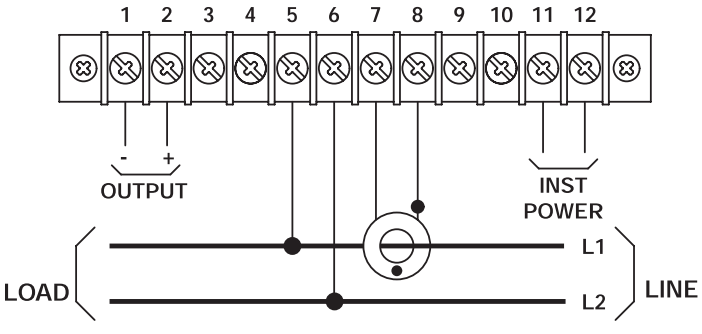

USING CURRENT TRANSFORMERS

THREE PHASE - THREE WIRE, THREE PHASE - FOUR WIRE CONNECTIONS

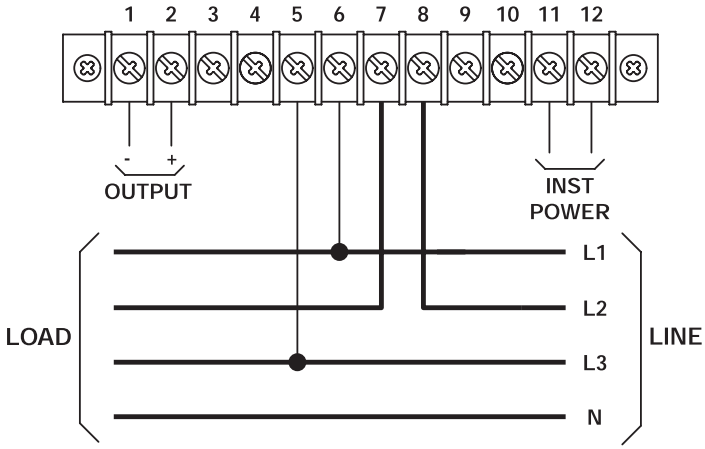

DIRECT CONNECTION

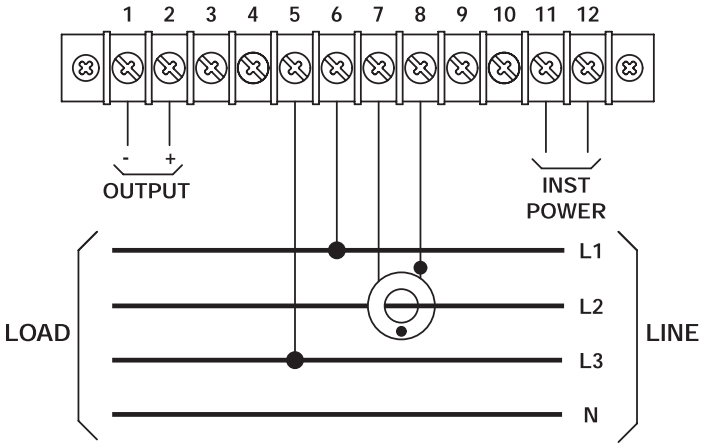

USING CURRENT TRANSFORMERS

INSTALLATION NOTE

PROPER INSTALLATION OF THE MODEL PF PHASE ANGLE TRANSDUCER IS CRITICAL.
THE CONNECTION DIAGRAMS SHOWN ABOVE MUST BE FOLLOWED PRECISELY.
IF APPLICATION REQUIRES THE USE OF CURRENT TRANSFORMERS, INSURE THAT POLARITY IS CORRECT.
ANY DEVIATION FROM THE CONNECTIONS SHOWN WILL RESULT IN A LOCKED FULL SCALE OUTPUT SIGNAL.

CASE DIMENSIONS

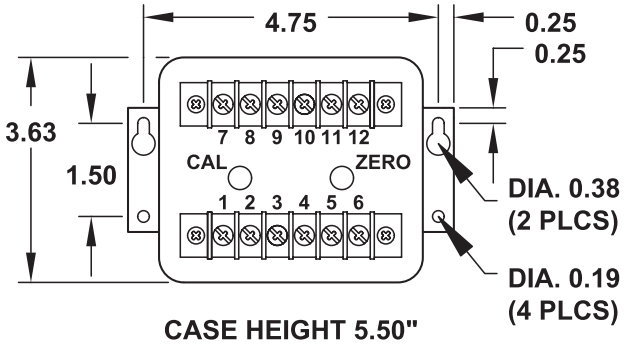

CASE HEIGHT 5.50"
2.5 Lbs.

All Dimensions In Inches

FLEX-CORE®
Div. Morlan & Associates, Inc.
4970 Scioto Darby Rd. Hilliard, Ohio 43026

WWW.FLEX-CORE.COM
sales@flex-core.com

PHONE (614) 889-6152
TECH. ASSISTANCE (614) 876-8308
FAX # (614) 876-8538

SIGNAL CONDITIONERS

PROCESS SIGNAL CONDITIONERS — *MODEL* SG

FEATURES

The family of SG Process Signal conditioners provide an isolated linear output signal from a standard or non-standard input process signal. Factory calibrated for various input and output signals.

APPLICATIONS

- Process Control
- Signal Isolation
- Signal Conversion



MODEL SELECTION

SG – □ – □ – □ □

RATED INPUT		RATED OUTPUT		INSTRUMENT POWER		ADJUSTMENT OPTIONS	
1	0-1mAdc	01	0-1mAdc	H	115Vac	(BLANK)	±10% Output Span Adj. ±1% Zero Adj.
2	0-10Vdc	02	0-10Vdc	**G	230Vac	1	50% Output Span Adj.
3	0-5Vdc	03	0-5Vdc			2	+10% Output Span Adj. 50% Zero Adj.
4	1-5Vdc	04	1-5Vdc			3	50% Output Span Adj. 50% Zero Adj.
5	0-20mAdc	05	0-20mAdc				
6	4-20mAdc	06	4-20mAdc				
7	20-4mAdc	07	0-5mAdc				
8	10-50mAdc	08	4-20mA loop powered				
		09	4-12-20mAdc				

ORDERING INFORMATION

Example:
4-20mAdc Input and 0-1mAdc Output, 115Vac Instrument Power.
SG-6-01-H

SPECIFICATIONS

INPUT ..... See Table
Burden (Ω)
1mAdc 1K
5Vdc,10Vdc,1-5Vdc,50mVdc,100mVdc ..... min. 100K
20mAdc 250
50mAdc 100
Over range ..... 2 X Rated input.
Response Time 1ms
Dielectric Test .... (Input to Output) 1000Vdc
(Input/Output to Inst. Pwr.) 1500Vdc
Instrument Power 95-135Vac, 50-400Hz, 3.5VA
**Optional 230Vac, 50-60Hz
Optional DC Instrument Power Available. Consult factory
Termination ..... 14 AWG max.

OUTPUT
ACCURACY .... (Set Point) ..... ± 0.25% F.S.
(Linearity) ..... ± 0.1% F.S.
Load on Output (Ω)
1mAdc 0-10K
5mAdc 0-2.4K
5Vdc,10Vdc ..... >2K
1-5Vdc ..... >2K
20mAdc 0-600
Response Time 10ms
Ripple ..... < ±0.5% F.S.
Temperature Range ..... -20°C to +65°C
Temperature Effect ..... ±0.01%/°C

CONNECTIONS

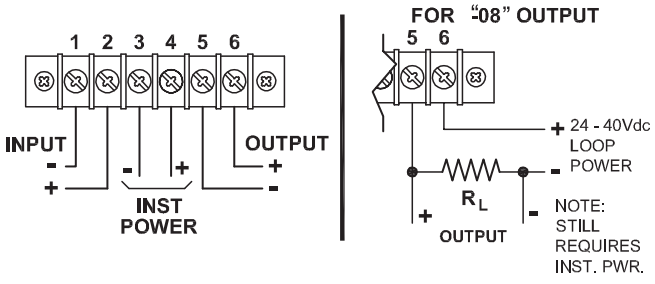

CASE DIMENSIONS

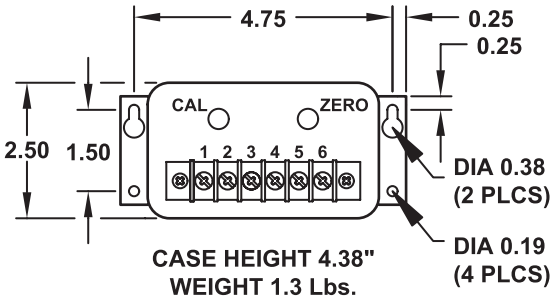

All Dimensions In Inches

FLEX-CORE®
Div. Morlan & Associates, Inc.
4970 Scioto Darby Rd. Hilliard, Ohio 43026
WWW.FLEX-CORE.COM
sales@flex-core.com
PHONE (614) 889-6152
TECH. ASSISTANCE (614) 876-8308
FAX # (614) 876-8538

SIGNAL CONDITIONERS

PROCESS SIGNAL CONDITIONER — *MODEL* MSG

DIN RAIL MOUNTED

FEATURES

- High CMV isolation of 1000Vdc.
- Isolated linear output from a standard or non-standard input process signal.
- Factory calibrated for various input and output signals. Special ranges and calibration available.
- Zero and Cal "Span" adjustments.
- Easy-mount DIN enclosure

APPLICATIONS

- Process control
- Signal isolation
- Signal conversion



MODEL SELECTION

MSG – ☐ – ☐ – ☐

RATED INPUT		RATED OUTPUT		INSTRUMENT POWER	
1	0-1mAdc	01	0-1mAdc	H	115Vac
2	0-10Vdc	02	0-10Vdc	5	5Vdc
3	0-5Vdc	03	0-5Vdc	12	12Vdc
4	1-5Vdc	04	1-5Vdc	15	15Vdc
5	0-20mAdc	05	0-20mAdc	24	24Vdc
6	4-20mAdc	06	4-20mAdc		
7	20-4mAdc	07	0-5mAdc		
8	10-50mAdc				
9	0-50mVdc				
10	0-100mVdc				

ORDERING INFORMATION

Example: 4-20mA Input, 0-1mA Output, 115Vac Instrument Power.

MSG-6-01-H

SPECIFICATIONS

INPUT ..... See Table

Frequency ..... dc

Burden (Ω)

- 1mAdc 1K
- 5Vdc,10Vdc,1-5Vdc,50mVdc,100mVdc ..... min. 100K
- 20mAdc 100
- 50mAdc 40

Over range ..... 2 X rated input

Dielectric Test .... (Input to Output) 1000Vdc

(Input/Output to Inst. Pwr.) 1500Vdc

Instrument Power 95-135Vac, 50-400Hz, 3.5VA

Termination ..... 14 AWG max.

Weight ..... 0.4 Lb.

OUTPUT

ACCURACY .... (Set Point) ..... ± 0.25% F.S.

(Linearity) ..... ± 0.1% F.S.

Load on Output (Ohms)

- 1mAdc 0-10K
- 5mAdc 0-2K
- 5Vdc,10Vdc ..... >2K
- 1-5Vdc ..... >1M
- 20mAdc 0-500

Response Time 10ms

Ripple ..... < ±0.5% F.S.

Temperature Range ..... -20°C to +65°C

Temperature Effect ..... ±0.01%/°C

DIMENSIONS

UNIT CAN BE MOUNTED ON:
RAIL EN50035 (DIN 1)
RAIL EN50022 (DIN 2)

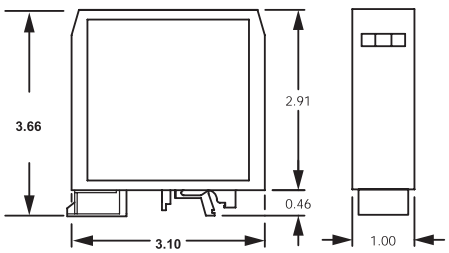

All Dimensions In Inches

CONNECTION DIAGRAM

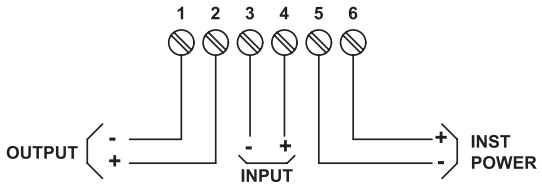

FLEX-CORE®
Div. Morlan & Associates, Inc.
4970 Scioto Darby Rd. Hilliard, Ohio 43026

WWW.FLEX-CORE.COM
sales@flex-core.com

PHONE (614) 889-6152
TECH. ASSISTANCE (614) 876-8308
FAX # (614) 876-8538

PRECISION INTEGRATOR/RELAY OUTPUT — MODEL VFC

CONVERTS DC INPUT TO TIME-INTEGRATED PULSE

FEATURES

- Provides relay closure count which is proportional to the time integral of the input signal.

APPLICATIONS

- Designed for use with voltage, current, watt, or var transducers with analog outputs compatible with the inputs in chart. Provides Vhr, Amphr., Varhr, and Whr. output pulse.



SPECIFICATIONS

INPUT ..... See Table
Overload ..... 10Vdc max.
Impedance (Ω)
Voltage input models ..... > 1M
Current input models ..... < 200
Frequency ..... dc with up to 100% ripple @ 120Hz or higher
OUTPUT
ACCURACY ..... **± 0.25% F.S.**
Relay ..... N/O SPST, 120V, 0.5A contact rating
Relay closure period 200ms
Linearity ..... ±0.1% F.S.
Temperature Range ..... -10°C to +60°C
Temperature Effect ..... ±0.5%
Instrument Power (std.) 85-135Vac, 50-400Hz, 3.5VA
"-22" Option ..... 230Vac, 50/60Hz, ±15%
Weight ..... Approximately 1.3 Lbs.

INPUT RANGE	CLOSURE RATE (COUNTS/HR.)	CATALOG NUMBER
0 - 50mVdc	0 to 10000	VFC-010
0 - 100mVdc	0 to 10000	VFC-020
0 - 150mVdc	0 to 10000	VFC-030
0 - 250mVdc	0 to 10000	VFC-040
0 - 1mAdc	0 to 10000	VFC-050
0 - 10Vdc	0 to 10000	VFC-060
4 - 20mAdc	0 to 10000	VFC-070
0 - 5Vdc	0 to 10000	VFC-080

CUSTOM COUNT RATES AVAILABLE-CONSULT FACTORY

CONNECTION DIAGRAM

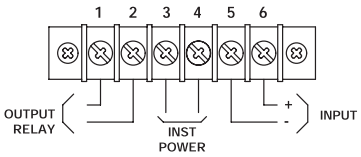

Internal output relay connection at terminals 1, and 2.
AC instrument power-terminals 3, 4.

CASE DIMENSIONS

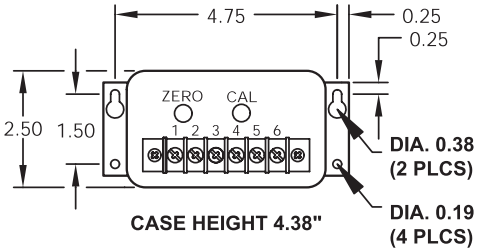

All Dimensions in Inches

CURRENT-TO-VOLTAGE CONVERTER — MODEL LRB

CONVERTS 0-1mA TO VOLTAGE OUTPUT

DC OUTPUT REQUIRED	LOAD RESISTANCE (Ω)	CATALOG NUMBER
0 - 500mV	500	LRB-500
0 - 1V	1000	LRB-1000
0 - 2V	2000	LRB-2000
0 - 5V	5000	LRB-5000
0 - 10V	10000	LRB-10000

NON-STANDARD RESISTANCE VALUES AVAILABLE
200 to 10000 Ω

MODEL LRB SPECIFICATIONS

ACCURACY ..... **± 0.1% (500-10000 Ω models)**
± 0.2% (200-499 Ω models)
Temperature Range ..... -20°C to +70°C
Temperature Effect ..... ±0.005%/°C
Weight ..... 1.0 oz.

CASE DIMENSIONS

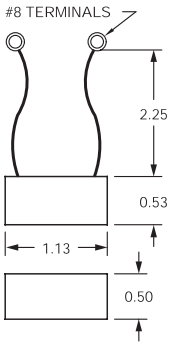

All Dimensions in Inches



FLEX-CORE®
Div. Morlan & Associates, Inc.
4970 Scioto Darby Rd. Hilliard, Ohio 43026
WWW.FLEX-CORE.COM
sales@flex-core.com
PHONE (614) 889-6152
TECH. ASSISTANCE (614) 876-8308
FAX # (614) 876-8538

3 PHASE MONITOR — MODEL 257

3 PHASE MONITOR



FEATURES

- Detects Phase Loss, Low Voltage, Phase Reversal
- 50Hz, 60Hz, and 400Hz Models
- Automatic or Manual Reset

E60400

DESCRIPTION

The Model 257 continuously monitors 3-phase power lines for abnormal conditions. When properly adjusted, the Model 257 will detect phase loss on a loaded motor even when regenerated voltage is present. This device consists of a solid-state voltage and phase-angle sensing circuit, driving an electro-mechanical relay. When correct voltage and phase rotation are applied, the internal relay will energize. A fault condition will de-energize the relay. When the fault is corrected, the monitor will automatically reset. (A manual version is also available)

The Model 257 does not require a neutral connection and can be used with Wye or Delta systems. Voltage ranges are sufficiently wide to allow for proper adjustment to existing conditions. Both TRIP and NORM condition indicators are provided to aid in adjustment and system trouble-shooting.

Typical Application

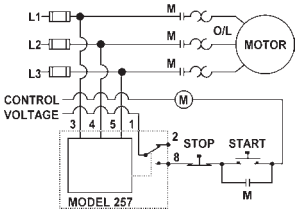

INSTALLATION

Mount the 8-pin socket in a suitable enclosure. A NEMA-1 rated enclosure, designed for socket-mounted relays is available upon request. Connect 3-phase power to terminals 3, 4, and 5 on the socket. Phase rotation should be verified. Connect the load control wiring to the appropriate terminals on the socket:

Motor Control Application ..... Use terminals 1 and 8
Phase Loss Alarm Applications ..... Use terminals 1 and 2

Insert the Model 257 into the socket and apply power. If the contact does not transfer (green light ON), check that all phases are present, and of the correct voltage. If power is correct, rotate the level adjustment counter-clockwise. If the contact still does not transfer, remove power and reverse two of the three phase wires at the socket (phase rotation reversed). Re-apply power. The contact should transfer to provide a signal path between pins 1 and 8.

ADJUSTMENT SETTING

The following procedure will allow the Model 257 to be adjusted to achieve a trip point just below the nominal phase-to-phase voltage, where the unit is applied.

Rotate the adjustment control fully clockwise, or until the red (TRIP) indicator illuminates. Slowly rotate the adjustment control in a counter-clockwise direction, just until the green (NORM) indicator illuminates. At this point, the Model 257 is the most sensitive to irregular power line conditions. If nuisance tripping occurs, turn the control slightly further counter-clockwise. A more accurate setting will require the use of a 3-phase variac to lower the voltage to an exact measurable setting. A factory set version of all models and voltage ranges are available. (Consult factory for details.)

TROUBLESHOOTING

Should the Model 257 fail to operate properly, check that all three voltages are present, and are of the correct voltage level and phase rotation. Check all fuses and verify that all wiring connections are correct. If problems persist, consult the factory for assistance.

MANUAL RESET VERSIONS

If you do not wish to use the external reset switch on the manual reset version, you must jumper pins 6 and 7. Refer to the manual reset 8-pin diagram.

SPECIFICATIONS MODEL 257

AUTO Reset	B257B	257B	A257B	EX257B	B257B-400	257B-400
Manual Reset	B257BM	257BM	A257BM	WX257BM	B257BM-400	257BM-400
Nominal AC Voltage Phase-to-Phase	120VAC	208/240VAC	480VAC	380VAC	120VAC	208/240VAC
Case Color	Gray	Red	Yellow	Yellow	Gray	Red
Adjustment Range	85-120VAC	160-240VAC	380-480VAC	300-400VAC	85-120VAC	160-240VAC
Frequency	60Hz	60Hz	60Hz	50Hz	400Hz	400Hz
Power Consumption	1.4W	2.4W	3.7W	3.0W	1.4W	2.4W
Transient Protection	2500VAC for 10msec					
Repeat Accuracy	±0.1% of set point (fixed conditions)					
Response Time	50msec (set or reset)					
Dead Band	Approximately 2%					
Output Contacts	SPDT 10 Amps at 240VAC					
Expected Relay Life	Mechanical: 10 Million Operations Electrical: 100,000 Operations at rated load					
Operating Temp.	-20°F to +131°F					
Humidity Tolerance	0-97% w/o condensation					
Enclosure Material	Dust Cover: ABS Plastic Header: Nylon					
Mounting	8-Pin Socket (**Sold separately)					
Weight	5 ounces					
Agency Approvals	**UL Recognized* and CSA Certified** *Conditions of acceptability: (1) The 380V and 480V versions must be used with a UL Recognized 600Vac socket (2) For use in a Pollution Degree 2 Environment (3) To Be Installed on the load side of branch circuit protection rated 10A.					

**Order 8-Pin Socket Number 51X120 (UL Listing E126447)
Smart Socket Available for 480 to 635Vac Circuits

DIMENSIONS

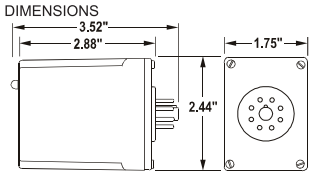

All Dimensions In Inches

PIN DESIGNATIONS

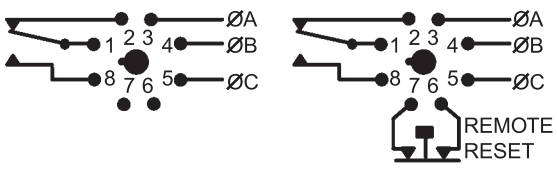

Automatic Reset — Manual Reset

FLEX-CORE®
Div. Morlan & Associates, Inc.
4970 Scioto Darby Rd. Hilliard, Ohio 43026
WWW.FLEX-CORE.COM
sales@flex-core.com
PHONE (614) 889-6152
TECH. ASSISTANCE (614) 876-8308
FAX # (614) 876-8538

SMART SOCKET (8-PIN SOCKET) *MODEL* SMART SOCKET

FEATURES



- Allows socket mounted phase loss monitors to operate up to 635VAC phase-to-phase
- No Adjustments required - simply connect power and control circuits
- CSA Certified

DESCRIPTION

The Smart Socket is the first socket which will allow monitoring of voltages up to 635Vac with a socket mounted phase loss relay. The appropriate relay will allow monitoring for phase loss, phase reversal, low voltage and high voltage conditions. A key safety feature of the Smart Socket is it will not allow the voltage potential at the pin connections to rise to the full input voltage when the relay is removed. Refer to the charts for more information. Two versions of the Smart Socket are available, one for 480Vac and one for 575Vac applications. **The Smart Socket is designed to be used only with the Model 257B series.**

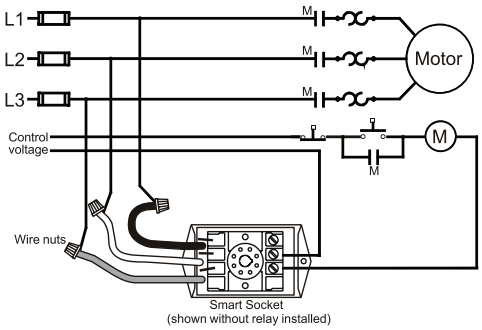

SPECIFICATIONS

Model	Type C	Type D
Nominal Input Voltage	480Vac	575Vac
Maximum Input Voltage	520Vac	635Vac
Power Consumption	6 Watts Max.	
Operating Frequency	50-400Hz	
Humidity Tolerance	0-97% w/o Condensation	
Weight	9 Ounces	
Agency Approval	CSA Certified	

DIMENSIONS

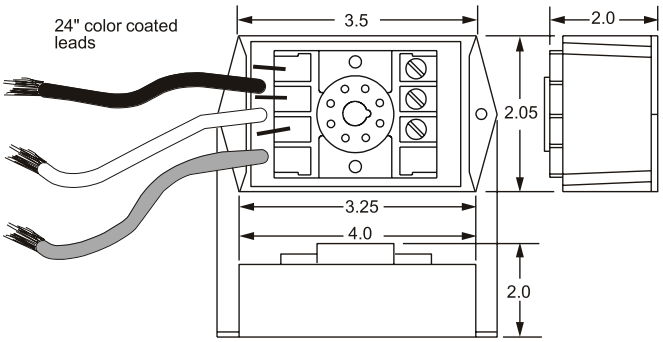

All Dimensions In Inches

Type C Socket for 480VAC Applications

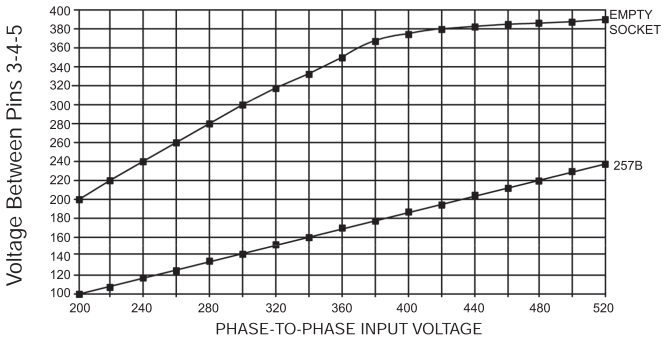

As shown above, with a monitor inserted in the socket, the voltage on pins 3, 4, and 5 (inputs to the monitor) is limited to the operating range of the monitor. The voltage change is linear over the full adjustment range of the monitor. With the monitor removed (and power applied) the voltage potential rises to the input voltage level. However, from approximately 380Vac to 520Vac the Smart Socket limits the voltage potential so that it never rises above 395Vac.

Type D Socket for 600VAC Applications

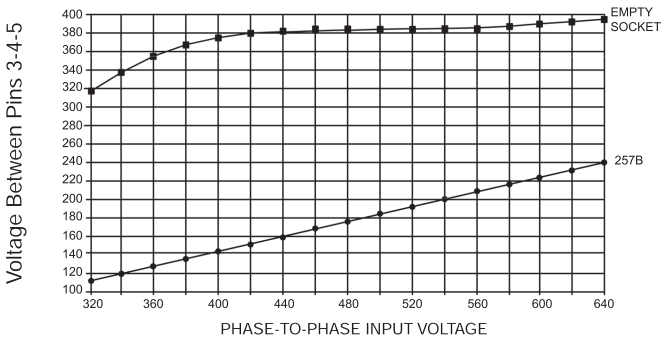

As shown above, with a monitor inserted in the socket, the voltage on pins 3, 4, and 5 (inputs to the monitor) is limited to the operating range of the monitor. The voltage change is linear over the full adjustment range of the monitor. With the monitor removed (and power applied) the voltage potential rises to the input voltage level. However, at approximately 380Vac to 635Vac the Smart Socket limits the voltage potential so that it never rises above 390Vac.

FLEX-CORE®
Div. Morlan & Associates, Inc.
4970 Scioto Darby Rd. Hilliard, Ohio 43026
WWW.FLEX-CORE.COM
sales@flex-core.com
PHONE (614) 889-6152
TECH. ASSISTANCE (614) 876-8308
FAX # (614) 876-8538

3 PHASE CURRENT DETECTOR

3 PHASE CURRENT UNBALANCE DETECTOR *MODEL* 272

3 PHASE CURRENT UNBALANCE DETECTOR

FEATURES

- Adjustable trip delay
- Adjustable unbalance percentage
- Automatic Reset

E60400



DESCRIPTION

The Model 272 3-Phase Current Unbalance Detector monitors 3-phase lines to detect an unbalanced current. It can also monitor three separate single phase lines for equal current levels. The percentage of unbalance is adjustable from 2% to 25% by adjusting a front panel control. An unbalance greater than this setting energizes the relay. The formula for an unbalance is:

$$\frac{\text{(MAX CURRENT-MIN CURRENT)}}{\text{MAX CURRENT}} \times 100 = \%$$

An adjustable trip delay of 0.5 to 10 seconds is also provided. For optimum performance, operating currents should be kept in the 1 to 5 amps range. However, zero current on each phase is considered to be a balanced condition.
Continuous currents, up to 10 amps per phase, will not damage the unit, nor will current surges up to 40 amps for 2 seconds. The contacts are automatically reset when the unbalanced condition is corrected.
A supply voltage of 24 or 120 VAC is required for this unit.

INSTALLATION

INSTALLATION

- Mount the Model 272 in a suitable enclosure.
- Connect AC operating power to the appropriate terminals.
- Connect the normally closed (N.C.) relay contacts to the load control wiring.
- Connect the 3-phase currents or CT outputs to the current input terminals marked A B C.
- Set the PERCENT UNBALANCE and TRIP DELAY adjustments to the desired levels, and apply operating power.

TROUBLESHOOTING

Should the monitor fail to operate properly, check that all three currents are present and are of the correct level. Check all fuses and verify that all wiring connections are correct. Should problems persist, contact the factory at for assistance.

SPECIFICATIONS MODEL 272

Model	272-24	272-120
Input Voltage	24Vac	115Vac
Input Voltage Range	20-28Vac	100-130Vac
Power Consumption	1.5W	
VA Burden	0.5VA per phase	
Frequency Range	50-400Hz	
Current Range	1-5Aac	
Max. Input Current	40 amps for 2 seconds	
Unbalance Adjustment	2% - 25%	
Trip Delay	0.5 to 10 seconds +/- 20%	
Contact Rating	SPDT 10A at 240Vac resistive	
Expected Relay Life	Mech: 10 million operations Elec: 100,000 at rated load	
Transient Protection	2500V for 10msec	
Operating Temperature	-40° to +131°F	
Humidity Tolerance	0-97% w/o condensation	
Enclosure Material	ABS plastic	
Weight	1Lb. 1.5oz.	

DIMENSIONS

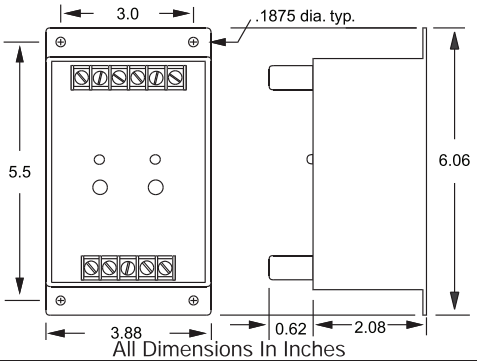

All Dimensions In Inches

TYPICAL APPLICATION

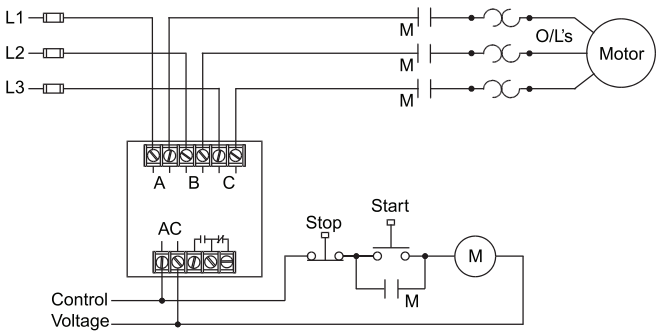

FLEX-CORE®
Div. Morlan & Associates, Inc.
4970 Scioto Darby Rd. Hilliard, Ohio 43026

WWW.FLEX-CORE.COM
sales@flex-core.com

PHONE (614) 889-6152
TECH. ASSISTANCE (614) 876-8308
FAX # (614) 876-8538

SELECTOR SWITCHES

VOLTAGE AND CURRENT SELECTOR SWITCHES *MODEL* 9524xx

FEATURES

- Heavy duty switchgear style design.
- Terminals easily accessible for wiring.
- Large screws and saddle wiring clamps.
- Custom configurations available.

All models on this page
UL Recognized

c UL us
101598



APPLICATIONS

- For AMMETERS and VOLTMETERS

RATING

- Open continuous rating: 30A, 600V

INTERRUPTING RATINGS:
UL and CUL General Purpose
20A-120Vac
15A-240Vac
6A-600Vac
3A-125Vdc
1A-250Vdc

OPERATOR

It is suitable for steel panel, insulated panel, or centralized motor control clusters. A nameplate is included.

SWITCH DIMENSIONS

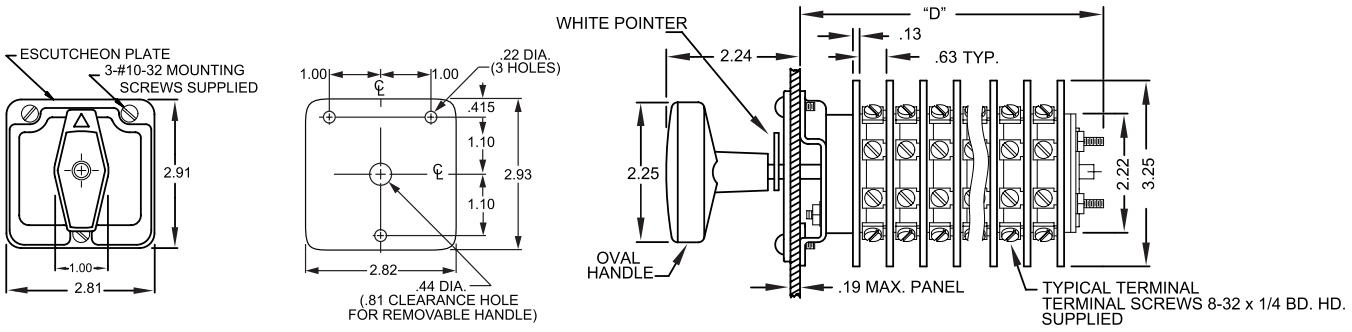

All Dimensions In Inches

MODELS AVAILABLE				
CATALOG NUMBER	DIM "D"	DECKS	FUNCTION	WEIGHT
952403C	2.9	2	VOLTMETER, 3 Phase, Phase to Neutral	1 Lb. 6 oz.
952404C	2.9	2	VOLTMETER, 3 Phase, Phase to Phase	1 Lb. 6 oz.
952405C	2.9	2	VOLTMETER, 3 Phase, Phase to Phase and Phase to Neutral	1 Lb. 8 oz.
952408C	2.9	2	AMMETER, 3 Phase, 2 Current Transformers	1 Lb. 8 oz.
952410C	2.9	2	AMMETER, 3 Phase, 3 Current Transformers	1 Lb. 6 oz.
952411C	5.4	6	AMMETER, 3 Current Transformers, Independent Circuits	2 Lb. 9 oz.
952415C	4.3	4	AMMETER-VOLTMETER, 3 Phase, Phase to Phase, 3 Current Transformers	1 Lb. 14 oz.

See the following pages for Schematics, Wiring Diagrams, and Contact Arrangement details.

FLEX-CORE®
Div. Morlan & Associates, Inc.
4970 Scioto Darby Rd. Hilliard, Ohio 43026
WWW.FLEX-CORE.COM
sales@flex-core.com
PHONE (614) 889-6152
TECH. ASSISTANCE (614) 876-8308
FAX # (614) 876-8538

SELECTOR SWITCHES

VOLTAGE AND CURRENT SELECTOR SWITCHES *MODEL* 9524xx

VOLTMETER
Transfer Switch
3 Phase,
Phase to Neutral

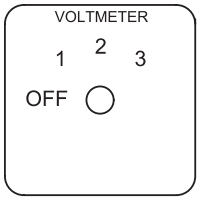

952403C

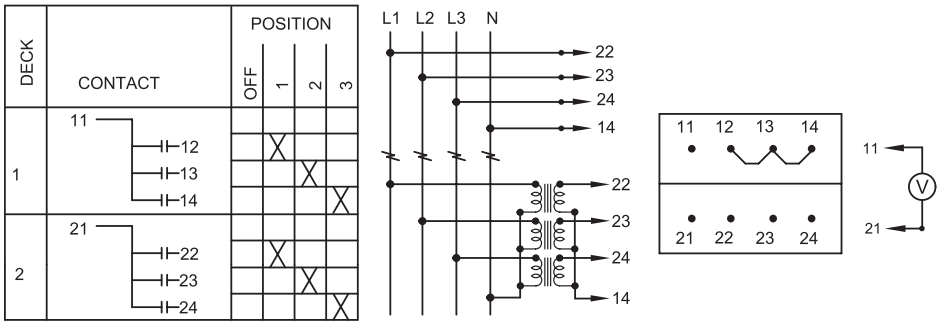

VOLTMETER
Transfer Switch
3 Phase,
Phase to Phase

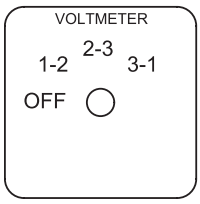

952404C

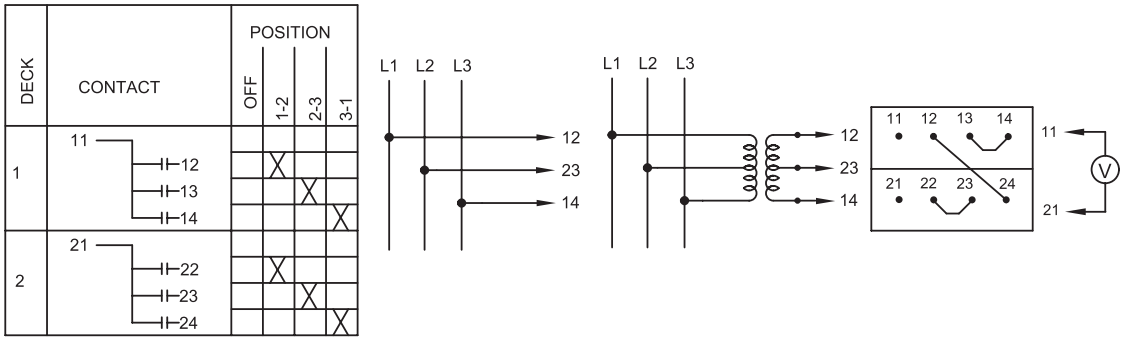

VOLTMETER
Transfer Switch
3 Phase,
Phase to Phase
and Phase to Neutral

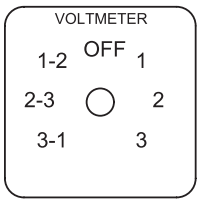

952405C

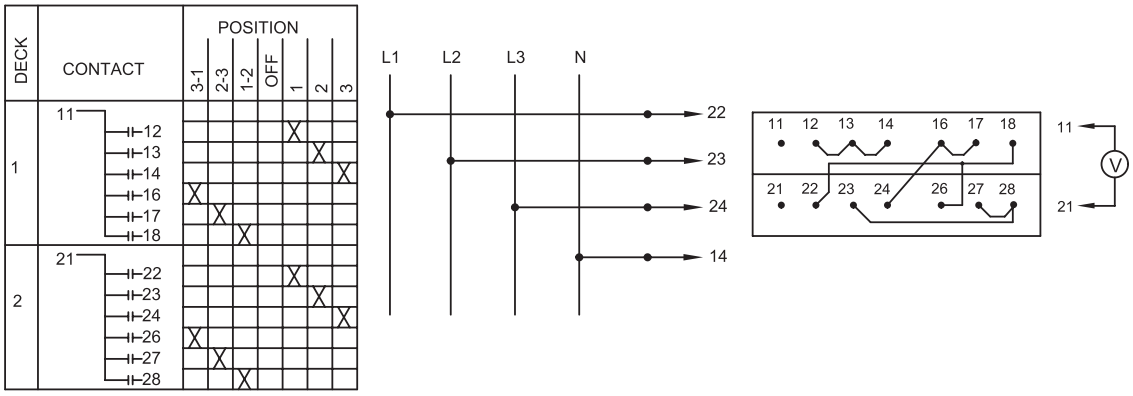

AMMETER
Transfer Switch
3 Phase,
2 Current Transformers

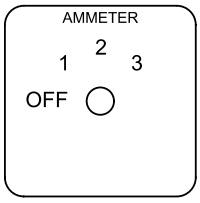

952408C

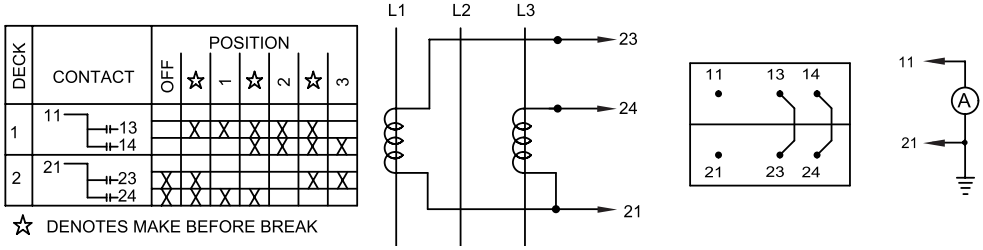

☆ DENOTES MAKE BEFORE BREAK

FLEX-CORE®
Div. Morlan & Associates, Inc.
4970 Scioto Darby Rd. Hilliard, Ohio 43026
WWW.FLEX-CORE.COM
sales@flex-core.com
PHONE (614) 889-6152
TECH. ASSISTANCE (614) 876-8308
FAX # (614) 876-8538

SELECTOR SWITCHES

VOLTAGE AND CURRENT SELECTOR SWITCHES *MODEL* 9524xx

AMMETER
Transfer Switch
3 Phase,
3 Current Transformers

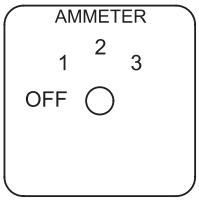

952410C

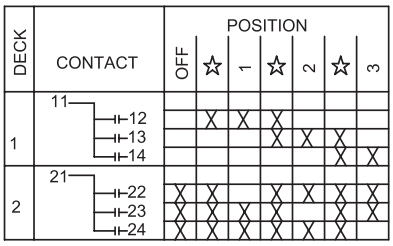

☆ DENOTES MAKE BEFORE BREAK

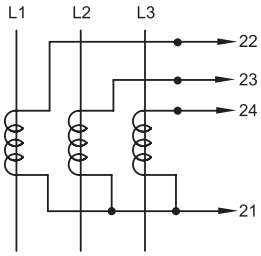

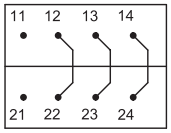

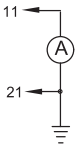

AMMETER
Transfer Switch
3 Current Transformers,
Independent Circuits

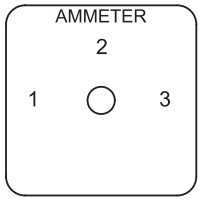

952411C

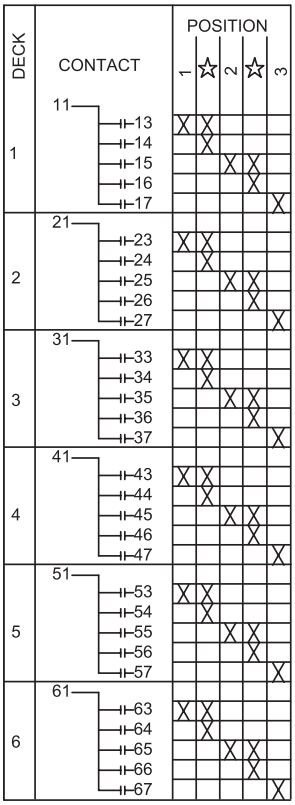

☆ DENOTES MAKE BEFORE BREAK

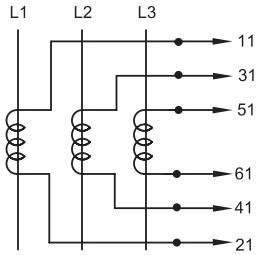

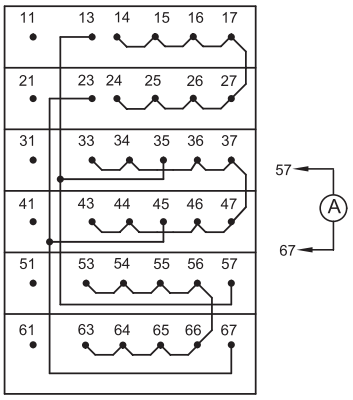

AMMETER-
VOLTMETER
Transfer Switch
3 Phase,
Phase to Phase,
3 Current Transformers

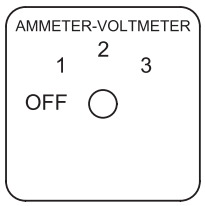

952415C

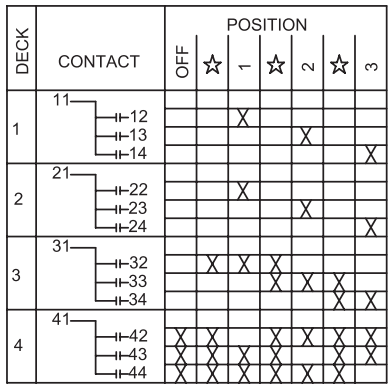

☆ DENOTES MAKE BEFORE BREAK

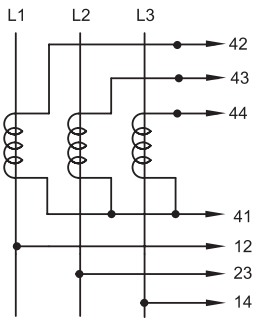

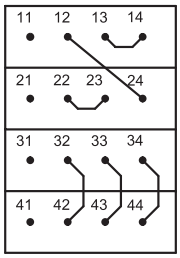

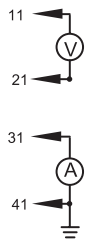

FLEX-CORE®
Div. Morlan & Associates, Inc.
4970 Scioto Darby Rd. Hilliard, Ohio 43026

WWW.FLEX-CORE.COM
sales@flex-core.com

PHONE (614) 889-6152
TECH. ASSISTANCE (614) 876-8308
FAX # (614) 876-8538

SELECTOR SWITCHES

VOLTAGE AND CURRENT SELECTOR SWITCHES *MODEL* N25

LOW COST SMALL SELECTOR SWITCHES

FEATURES

E257076 232553

- Switch designed for minimum mounting space.
- Heavy duty double break silver alloy contacts for long trouble free life.
- Terminals easily accessible for wiring.
- Large screws and saddle wiring clamps.
- Switches can be used in ambient temperatures from -25°C to +55°C.



APPLICATIONS

FOR AMMETERS AND VOLTMETERS.

RATING

30 AMPERES, 600 VOLTS
3hp @ 120Vac
5hp @ 240Vac
10hp @ 480Vac
15hp @ 600Vac

The N25 series switches are designed for use on instrumentation applications. The double break silver alloy contacts offer high breaking capacity and low contact resistance assuring long trouble free life.

OPERATOR
Designed for use in a standard 30mm pushbutton hole. It is suitable for steel panel, insulated panel, or centralized motor control clusters. A faceplate is attached.

ORDERING INFORMATION

EXAMPLE: Ammeter, Three Phase,
Three Current Transformers,
End of Circuit.
N25-61325-37S

SWITCH ASSEMBLY

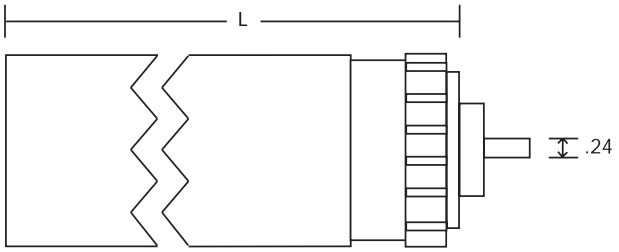

SWITCH DIMENSIONS

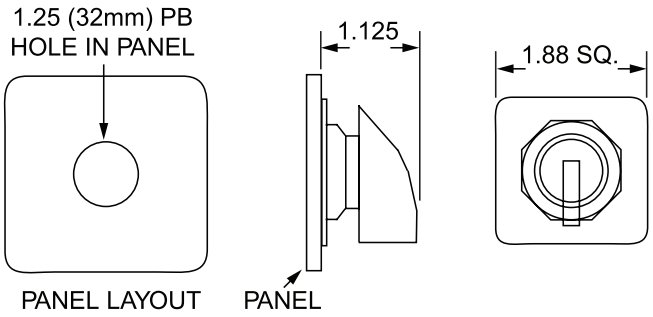

All Dimensions In Inches

MODELS AVAILABLE			WEIGHT
CATALOG NUMBER	DIM "L"	FUNCTION	
N25-61311-37S	2.76	VOLTMETER, Phase to Neutral, Three Phase, Four Wire	5 oz.
N25-61312-37S	2.76	VOLTMETER, Phase to Phase, Three Phase, Three Wire	5 oz.
N25-61313-37S	3.30	VOLTMETER, Phase to Phase, and Phase to Neutral, Three Phase	6 oz.
N25-61325-37S	3.30	AMMETER, Three Phase, End of Circuit, Three Current Transformers	6.5 oz.
N25-61328-37S	4.37	AMMETER, Three Phase, Three Current Transformers Independent of Circuit	8 oz.
N25-61331-37S	2.76	AMMETER, Three Phase, End of Circuit, Two Current Transformers	5 oz.
N25-61336-375	4.37	AMMETER & VOLTMETER, Three Phase, Three Wire	9 oz.
N25-61338-37S	4.37	AMMETER & VOLTMETER, Three Phase, Four Wire	8 oz.

FLEX-CORE®
Div. Morlan & Associates, Inc.
4970 Scioto Darby Rd. Hilliard, Ohio 43026
WWW.FLEX-CORE.COM
sales@flex-core.com
PHONE (614) 889-6152
TECH. ASSISTANCE (614) 876-8308
FAX # (614) 876-8538

SELECTOR SWITCHES

VOLTAGE AND CURRENT SELECTOR SWITCHES *MODEL* N25

VOLTAGE SWITCH
PHASE TO NEUTRAL
WITH OR WITHOUT P.T.'S

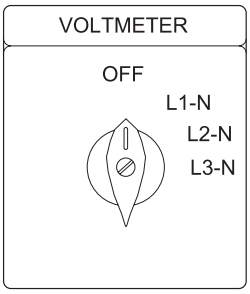

7	8		X		X
5	6				X
3	4			X	
1	2		X		
		OFF	L1-N	L2-N	L3-N

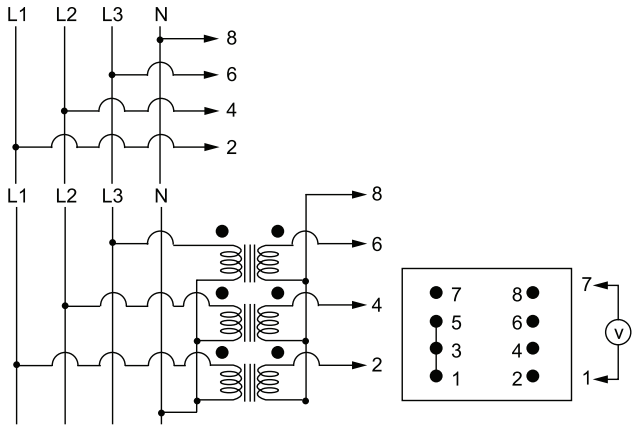

N25-61311-37S

VOLTAGE SWITCH
PHASE TO PHASE
WITH OR WITHOUT P.T.'S

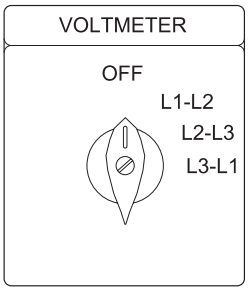

7	8		X		
5	6			X	X
3	4			X	
1	2		X		X
		OFF	L1-L2	L2-L3	L3-L1

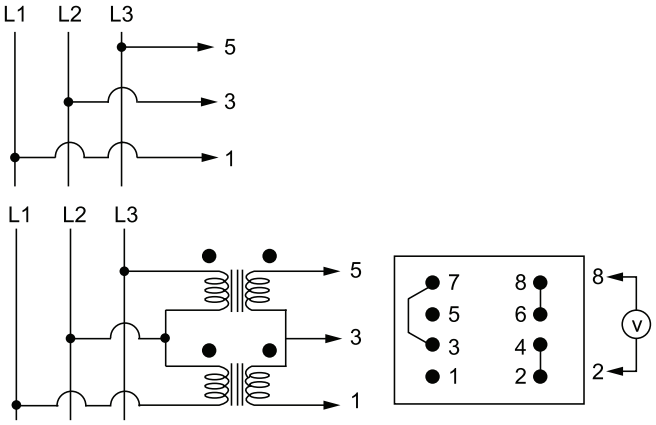

N25-61312-37S

VOLTAGE SWITCH
PHASE TO NEUTRAL
PHASE TO PHASE
WITH OR WITHOUT P.T.'S

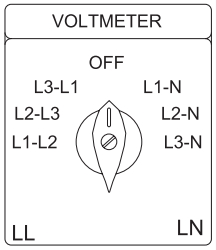

N25-61313-37S

11	12							X
9	10			X		X	X	
7	8		X				X	
5	6	X	X					
3	4	X				X		X
1	2			X				
		L1-N	L2-N	L3-N	OFF	L3-L1	L2-L3	L1-L2

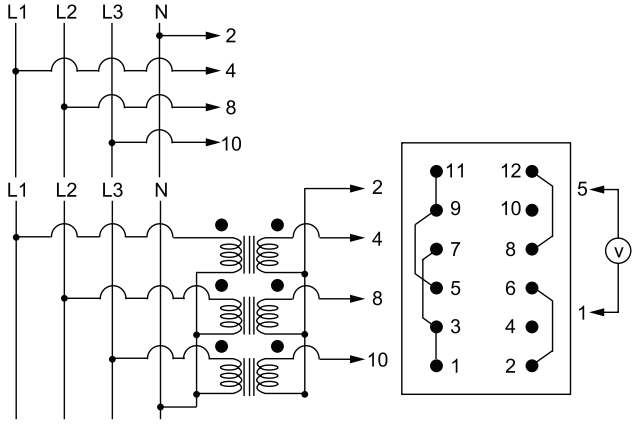

FLEX-CORE®
Div. Morlan & Associates, Inc.
4970 Scioto Darby Rd. Hilliard, Ohio 43026
WWW.FLEX-CORE.COM
sales@flex-core.com
PHONE (614) 889-6152
TECH. ASSISTANCE (614) 876-8308
FAX # (614) 876-8538

SELECTOR SWITCHES

VOLTAGE AND CURRENT SELECTOR SWITCHES *MODEL* N25

AMMETER SWITCH
3 PHASE
WITH 3 C.T.S
END OF CIRCUIT

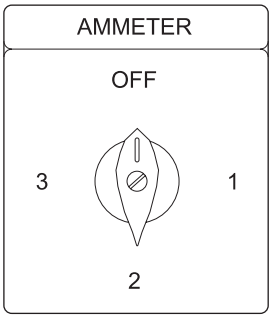

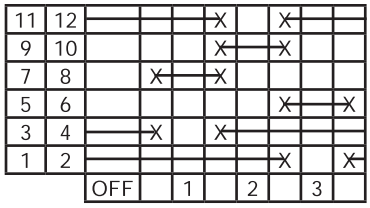

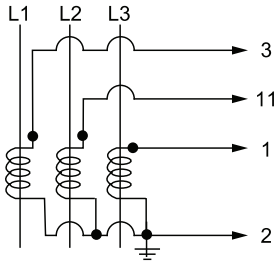

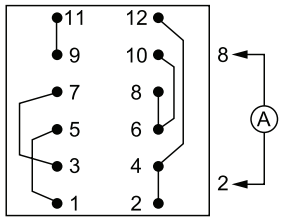

N25-61325-37S

AMMETER SWITCH
3 PHASE
WITH OR WITHOUT C.T.S
INDEPENDENT OF CIRCUIT LOCATION

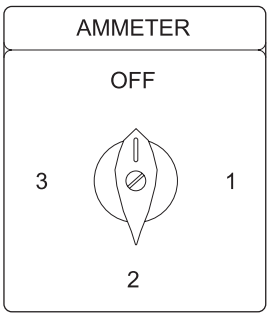

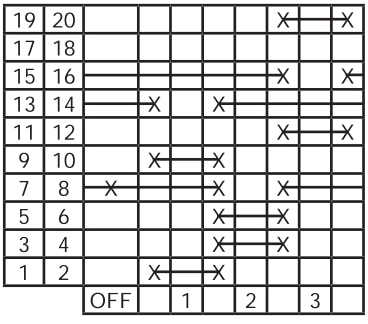



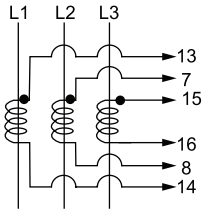

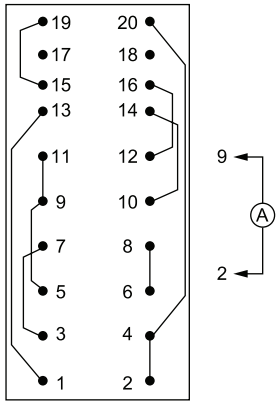

N25-61328-37S

FLEX-CORE®
Div. Morlan & Associates, Inc.
4970 Scioto Darby Rd. Hilliard, Ohio 43026
WWW.FLEX-CORE.COM
sales@flex-core.com
PHONE (614) 889-6152
TECH. ASSISTANCE (614) 876-8308
FAX # (614) 876-8538

SELECTOR SWITCHES

VOLTAGE AND CURRENT SELECTOR SWITCHES *MODEL* N25

AMMETER SWITCH
3 PHASE
WITH 2 C.T.S
END OF CIRCUIT

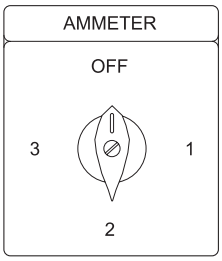

N25-61331-37S

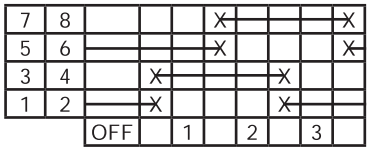

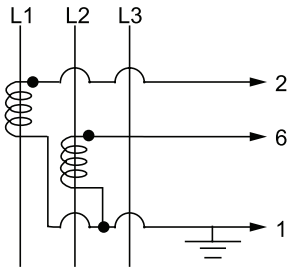

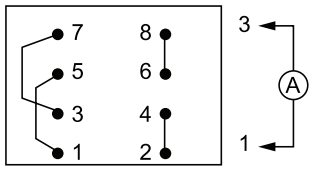

AMMETER, VOLTMETER SWITCH
3 PHASE
WITH C.T.S, WITH OR WITHOUT P.T.S.
PHASE TO PHASE VOLTAGE

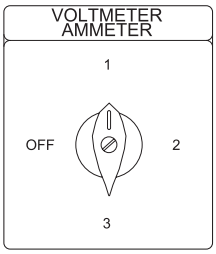

N25-61336-37S

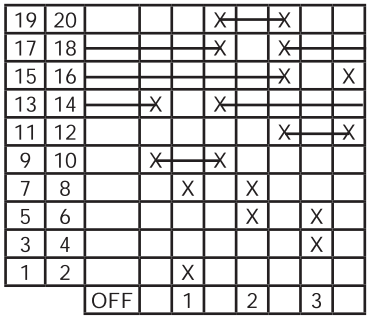

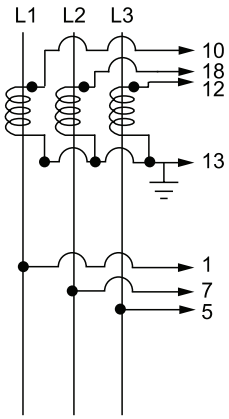

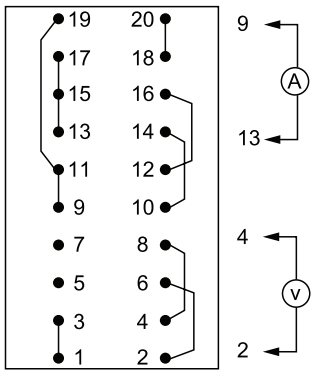

AMMETER, VOLTMETER SWITCH
3 PHASE
WITH C.T.S, WITH OR WITHOUT P.T.S.
PHASE TO NEUTRAL VOLTAGE

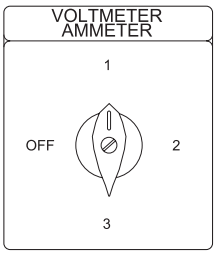

N25-61338-37S

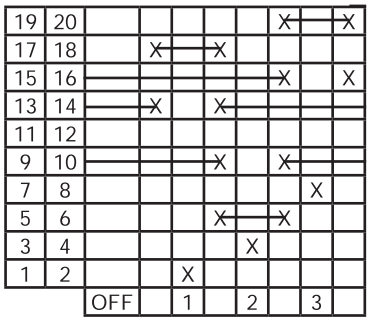

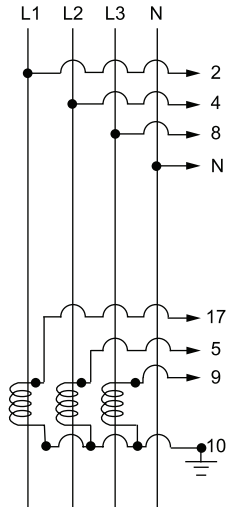

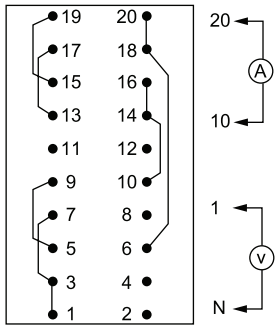

FLEX-CORE®
Div. Morlan & Associates, Inc.
4970 Scioto Darby Rd. Hilliard, Ohio 43026
WWW.FLEX-CORE.COM
sales@flex-core.com
PHONE (614) 889-6152
TECH. ASSISTANCE (614) 876-8308
FAX # (614) 876-8538

ANALOG PANEL METERS — MODEL HST90U

3 1/2" SQUARE

SPECIFICATIONS

Accuracy ..... **±2% Iron-Vane 50/60Hz**
When standard 60Hz ammeters are used on the extreme limits of 25 or 400Hz, an additional 0.75% error may be experienced.
ANSI Specification..... **All Meters meet ANSI C39.1**
Overload ..... Momentary - 10 x rated current, 10 consecutive intervals of 1/2 second with a 1 minute interval between successive applications; sustained, 120% for 6 hours.
Scale Length..... 2.88"
Scale Arc ..... 90°
Insulation Level..... 2000VRMS, 1 min.
Burden Data..... 0.5VA AC Amps
2.25VA AC Volts
Response Time..... 2.5 sec. max.

c UL us LISTED
E486912

MADE IN U.S.A.



AC VOLTMETERS 25-400Hz, Iron Vane		
VOLTS SCALE	VOLTS RATED	CATALOG NUMBER
		3 1/2"
150	150	HST90150V150V
300	300	HST90300V300V
600	600	HST90600V600V
600	150*	HST90150V600V
600	250*	HST90250V600V
750	150*	HST90150V750V
3000	150*	HST90150V3000V
5250	150*	HST90150V5250V

*PT Rated

AC AMMETERS Transformer-Rated, 0-5 Amperes, 25-400Hz, Iron Vane	
AMP SCALE	CATALOG NUMBER
	3 1/2"
5 Amp	HST905A5A
10 Amp	HST905A10A
15 Amp	HST905A15A
20 Amp	HST905A20A
25 Amp	HST905A25A
30 Amp	HST905A30A
40 Amp	HST905A40A
50 Amp	HST905A50A
60 Amp	HST905A60A
75 Amp	HST905A75A
80 Amp	HST905A80A
100 Amp	HST905A100A
150 Amp	HST905A150A
200 Amp	HST905A200A
250 Amp	HST905A250A
300 Amp	HST905A300A
400 Amp	HST905A400A
500 Amp	HST905A500A
600 Amp	HST905A600A
800 Amp	HST905A800A
1000 Amp	HST905A1000A
1200 Amp	HST905A1200A
1500 Amp	HST905A1500A
1600 Amp	HST905A1600A
2000 Amp	HST905A2000A
2400 Amp	HST905A2400A
2500 Amp	HST905A2500A
3000 Amp	HST905A3000A

MOUNTING/DIMENSIONS

3 1/2"

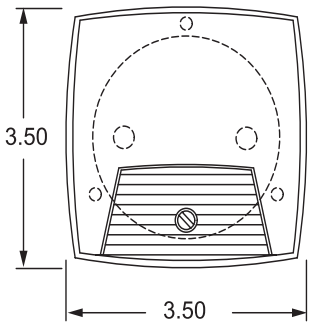

Weight: 7.0 oz.

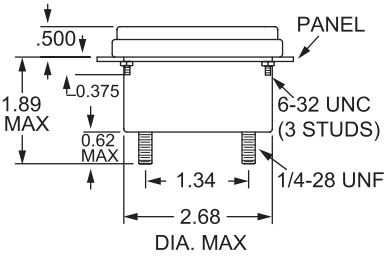

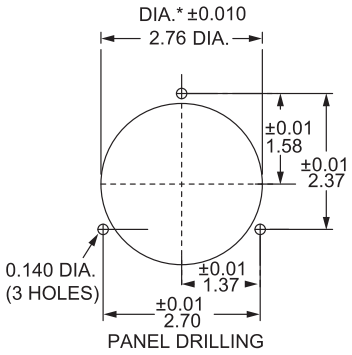

All Dimensions In Inches

FLEX-CORE®
Div. Morlan & Associates, Inc.
4970 Scioto Darby Rd. Hilliard, Ohio 43026
WWW.FLEX-CORE.COM
sales@flex-core.com
PHONE (614) 889-6152
TECH. ASSISTANCE (614) 876-8308
FAX # (614) 876-8538

ANALOG PANEL METERS

OUTDOOR PANEL METER — *MODEL* 584MM

3 1/2" ROUND

DESCRIPTION

The 584MM series of analog panel meters is designed to operate in harsh environments. The ruggedized meters have all metal cases and polycarbonate windows. The 584MM models are provided with a gasket to ensure dust and moisture protection. The meter mechanisms have a long history of lasting durability and performance within specifications.

MADE IN U.S.A.



SPECIFICATIONS

Accuracy ..... **±2%**
Repeatability 1%
Overload ..... 10X Momentary/2X Sustained
Response Time ..... 1.5 Seconds
Environmental IP66
Temperature ..... -55°F to +158°F
Weight ..... 14 oz.

VIBRATION, TEMPERATURE, AND ENVIRONMENTAL SPECIFICATIONS ALL EXCEED ANSI C39.1

AC VOLTMETERS 50-400Hz, Iron Vane		
VOLTS SCALE	**VOLTS RATED**	**3 1/2"**
150	0-150	584MM-15R-150VAC-FC
300	0-300	584MM-15R-300VAC-FC
600	0-600	584MM-15R-600VAC-FC
600	0-150*	584MM-15R-150VAC-600V-FC
750	0-150*	584MM-15R-150VAC-750V-FC
3000	0-150*	584MM-15R-150VAC-3000V-FC

*PT Rated

AC AMMETERS Transformer-Rated, 0-5 Amperes, 50-400Hz, Iron Vane	
AMP SCALE	**3 1/2"**
0-5	584MM-15R-5AAC-5AAC-FC
0-50	584MM-15R-5AAC-50AAC-FC
0-60	584MM-15R-5AAC-60AAC-FC
0-75	584MM-15R-5AAC-75AAC-FC
0-100	584MM-15R-5AAC-100AAC-FC
0-150	584MM-15R-5AAC-150AAC-FC
0-200	584MM-15R-5AAC-200AAC-FC
0-300	584MM-15R-5AAC-300AAC-FC
0-500	584MM-15R-5AAC-500AAC-FC
0-600	584MM-15R-5AAC-600AAC-FC
0-800	584MM-15R-5AAC-800AAC-FC
0-1000	584MM-15R-5AAC-1000AAC-FC
0-1500	584MM-15R-5AAC-1500AAC-FC
0-2000	584MM-15R-5AAC-2000AAC-FC

MOUNTING/DIMENSIONS

DIMENSION	3.5"
A	ø 3.50
B	ø 2.77
C	2.21
D	1.50
E	0.50
F	0.39
G	1/4-28 TERMINAL x 2
H	Ø 2.8125
I	Ø 0.16 x 3
J	Ø 3.16

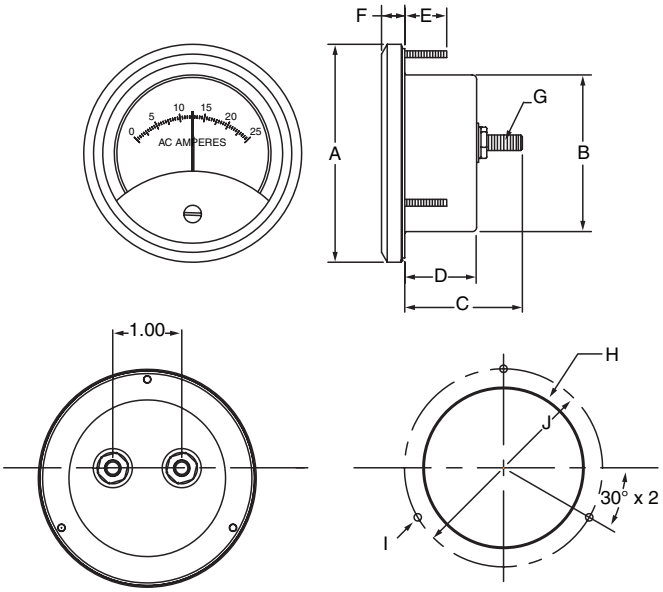

All Dimensions In Inches — Panel Cutout

FLEX-CORE®
Div. Morlan & Associates, Inc.
4970 Scioto Darby Rd. Hilliard, Ohio 43026
WWW.FLEX-CORE.COM
sales@flex-core.com
PHONE (614) 889-6152
TECH. ASSISTANCE (614) 876-8308
FAX # (614) 876-8538

ANALOG SWITCHBOARD METERS

INDUSTRIAL SWITCHBOARD METERS — *MODEL* HLS110

FEATURES

4 1/2" SQUARE

- Designed for industrial use - strong plastic case with rugged mounting studs and electrical terminals.
- Sealed cover and case - maintains accuracy and prolongs life.
- ±1.0% Accuracy - meets or exceeds ANSI C39.1 specifications.
- Easy to read at a distance or angle - bold clean dials; no shadows; no parallax error; attractive, uncluttered scales.
- Shielding of mechanisms ensures against magnetic field and steel panel mounting problems.
- Two piece dial and picket pattern. D'Arsonval movements are linear and repeatable to one percent on preprinted dials.

c UL us LISTED
E486912

MADE IN U.S.A.



RANGE	CATALOG NO.
AC VOLTMETERS, RMS Responding, self-contained	
0-150	HLS110-150V150V
0-250	HLS110-250V250V
0-300	HLS110-300V300V
0-500	HLS110-500V500V
0-600	HLS110-600V600V
AC VOLTMETERS, RMS Responding, 150V Rated (*) external potential transformers required.	
0-300	HLS110-150V300V
0-600	HLS110-150V600V
0-600 (*2.4:1 PT only)	HLS110-250V600V
0-750	HLS110-150V750V
0-3000	HLS110-150V3000V
0-5250	HLS110-150V5250V
0-6000	HLS110-150V6000V
0-9000	HLS110-150V9000V
0-15K	HLS110-150V15KV
0-18K	HLS110-150V18KV
0-45K	HLS110-150V45KV
0-150K	HLS110-150V150KV
AC AMMETERS, RMS Responding, 5A rated, external current transformer required	
0-50	HLS110-5A50A
0-100	HLS110-5A100A
0-150	HLS110-5A150A
0-200	HLS110-5A200A
0-250	HLS110-5A250A
0-300	HLS110-5A300A
0-400	HLS110-5A400A
0-500	HLS110-5A500A
0-600	HLS110-5A600A
0-800	HLS110-5A800A
0-1000	HLS110-5A1000A
0-1200	HLS110-5A1200A
0-1500	HLS110-5A1500A
0-1600	HLS110-5A1600A
0-2000	HLS110-5A2000A
0-2500	HLS110-5A2500A
0-3000	HLS110-5A3000A
0-4000	HLS110-5A4000A
0-5000	HLS110-5A5000A
0-6000	HLS110-5A6000A

DIMENSIONS

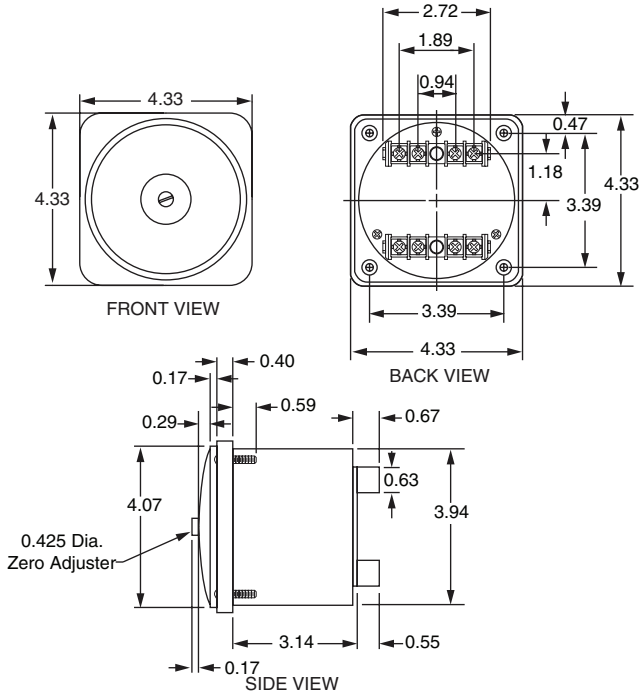

Weight: 1 Lb. 5.0 oz.

MOUNTING

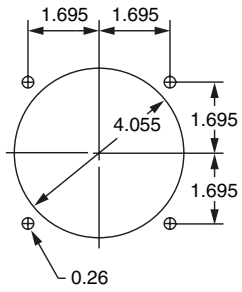

All Dimensions In Inches

ANALOG SWITCHBOARD METERS

FLEX-CORE®
Div. Morlan & Associates, Inc.
4970 Scioto Darby Rd. Hilliard, Ohio 43026

WWW.FLEX-CORE.COM
sales@flex-core.com

PHONE (614) 889-6152
TECH. ASSISTANCE (614) 876-8308
FAX # (614) 876-8538

DIGITAL PANEL METERS

DIGITAL PANEL METER — *MODEL* DL-40PSF

Intelligent Digital Meter Relay for Monitoring, Measurement, and Control Applications

FEATURES

- Inputs ..... Over 22 Input Modules
- Outputs ..... Up to four 5A 240Vac Form A Relays
  (16 Bit) 0-10V or 4-20mA Isolated Output (User scalable)
- Accuracy ..... ± 0.05% of reading, ± 2 digit
- Inst. Power 85-265Vac/95-370Vdc
  Or 15-48Vac/10-72Vdc
- Output Control ..... Timed On/Off or High/Low
- Enclosure ..... 1/8 DIN CASE
- Screw Terminal Adapter ..... Included for inputs and power.
- Weight ..... Approximately 1 lb.
- LED display ..... -1999 to +9999
  7 Segment, 0.56", 4 Digit
  or optional ..... 0.8" or Super Bright

CE



Program Button: This button is used to move from one program step to the next. When used simultaneously with the UP ARROW button, it initiates the Programming mode. When used simultaneously with the DOWN ARROW button, it initiates the Set point Program Mode.
Up Arrow: Increases the value of the displayed parameter.
Down Arrow: Decreases the value of the displayed parameter.
Annunciator: May be programmed to indicate the set point status of up to 4 parameters.

ORDERING SPECIFICATIONS

Base Meter Model DL-40PSF		Dis.	P.S.	Input	Output
Compete Meter, Order:	DL-40PSF	-XX	-XXX	-XXX	-XX
Display					
None		xxx			
Red LED, 0.56" High		DR			
Green LED, 0.56" High		DG			
Super-Bright LED, 0.56" High		DB			
Large Red LED, 0.8" High		LR			
Large Green LED, 0.8" High		LG			
Power Supply					
None			XXX		
85-265VAC/95-370Vdc			PS1		
18-48VAC/10-72Vdc			PS2		
Input Modules					
None				XXX	
AC-Volts Scaled RMS, 200/600V AC				IA01	
AC-Volts Scaled RMS, 200mV/2V/20V AC				IA02	
AC-mA Scaled RMS, 2/20/200mA AC				IA03	
AC-Amps Scaled RMS, 0-1 Amp AC (0-100.0)				IA04	
AC-Amps Scaled RMS, 0-5 Amp AC (0-100.0)				IA05	
AC-Volts True RMS, 200/600V AC				IA06	
AC-Volts True RMS, 200mV/2V/20V AC				IA07	
AC-mA True RMS, 2/20/200mA AC				IA08	
AC-Amps True RMS, 0-1 Amp AC (0-100.0)				IA09	
AC-Millivolt, Scaled RMS, 100mV AC				IA10	
AC-Amps True Rms, 0-5 Amp AC (0-100.0)				IA11	
DC-Volts, 2/20/200V/Custom w/24V DC Exc.				ID01	
DC-Millivolt, 20/50/100/200mV DC w/24V DC Exc.				ID02	
DC-MilliAmp, 2/20/200mA DC w/24V DC Exc.				ID03	
DC-Amps, 5A DC				ID04	
DC-Volts, 2/20/200/custom V DC w/offset and 24V Exc.				ID05	
DC-Amps, 1A DC				ID09	
Process Loop, 4-20mA (0-100.0)				IP01	
Process Loop, 4-20mA (0-100.0) w/24V DC Exc.				IP02	
Process Input, 1-5VDC = (0-100.0) w/offset, 24V Exc.				IP03	
Universal Process 2V/5V/10V/20V/200V/2mA/20mA/custom				IP07	
Prototype Bare Board for Customer Design				IPT1	

Output Options		Dis.	P.S.	Input	Output
None					XX
Single 5A Form-A Relay					R1
Dual 5A/240Vac Form A Relays					R2
Dual 10A Form C Relays					OR12
Dual 10A form C & Dual 5A form A Relays					OR14
Isolated 16 Bit Current Output, 4-20mA					AIC
Isolated 16 Bit Current Output, 0-10Vdc					AIV
Options (Add to Price of Meter)	**Part Number**				
Special Scaling for Single Input	CS-4				
NEMA 4X Clear Lockable Cover	OP-N4X/96X48				
Metal Surround for Case	OP-MTL96X48				
Metal Mount Clips (2pc.) for Thin Panels	OP-MTLCLIP				
High Strength Panel Mounting Adapter	OP-PMA96X48				
Dimensions					
Meter Case	Width 3.45" (95.4mm)				
	Height 1.6" (41.1mm)				
	Max. Depth 4.61" (117mm)				
Bezel Dimensions	3.78" X 1.89" (96 X 48mm)				
Panel Cutout Size	3.62" X 1.77" (92 X 45mm)				

Auto-sensing AC/DC power supply. For voltages between 85-265Vac/ 95-370 Vdc (PS1) or 15-48Vac / 10-72 Vdc (PS2)

CONNECTOR PINOUTS

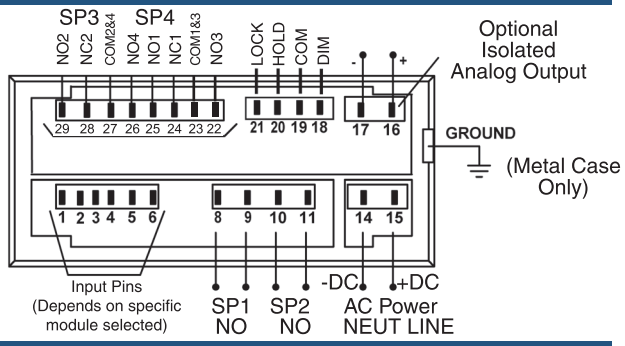

DIMENSIONS

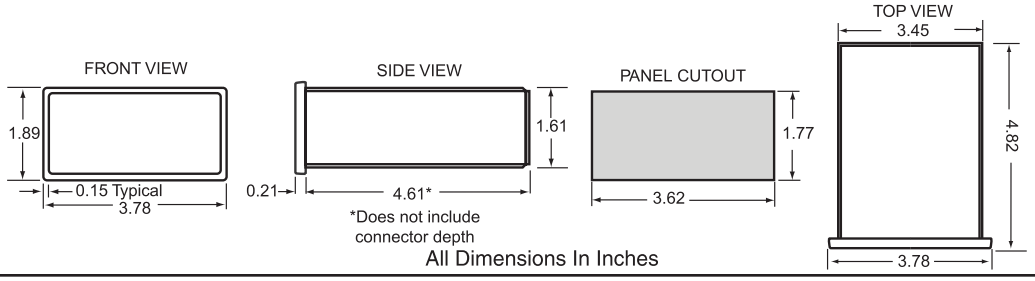

All Dimensions In Inches

FLEX-CORE®
Div. Morlan & Associates, Inc.
4970 Scioto Darby Rd. Hilliard, Ohio 43026
WWW.FLEX-CORE.COM
sales@flex-core.com
PHONE (614) 889-6152
TECH. ASSISTANCE (614) 876-8308
FAX # (614) 876-8538

DIGITAL PANEL METERS

DIGITAL AMMETER *MODEL* DL-40PSF-DR-PS1-IA05

Digital Meter for Monitoring and Measuring

FEATURES

- 4 Digit Red Led (0.56") with display range -1999 to 9999 (12000 counts)
- Auto-sensing AC/DC Power Supply
- Automatic Intelligent averaging smooths noisy signals
- Fast display response to real input signal changes
- User programmable input to display ratios
- Peak and Valley - View and Reset

SPECIFICATIONS

- Input ..... 0-5Aac Scaled RMS
- Accuracy ..... ± 0.05% of reading, ± 2 digit
- Inst. Power 85-265Vac/95-300Vdc
- Enclosure ..... 1/8 DIN CASE
- Screw Terminal Adapter ..... Included for inputs and power.
- Weight ..... Approximately 1 lb.
- Dimensions Meter Case ..... Width 3.45" (95.44mm)
  Height 1.6" (41.1mm)
  Max Depth 4.61" (117mm)
  Bezel ..... 3.78" X 1.89" (96 X 48mm)
  Panel Cutout ..... 3.62" X 1.77" (92 X 45mm)
- LED display ..... -1999 to +9999
  7 Segment, 0.56", 4 Digit



Program Button: This button is used to move from one program step to the next. When used simultaneously with the UP ARROW button, it initiates the Programming mode. When used simultaneously with the DOWN ARROW button, it initiates the Set point Program Mode.
Up Arrow: Increases the value of the displayed parameter.
Down Arrow: Decreases the value of the displayed parameter.

CONNECTOR PINOUTS

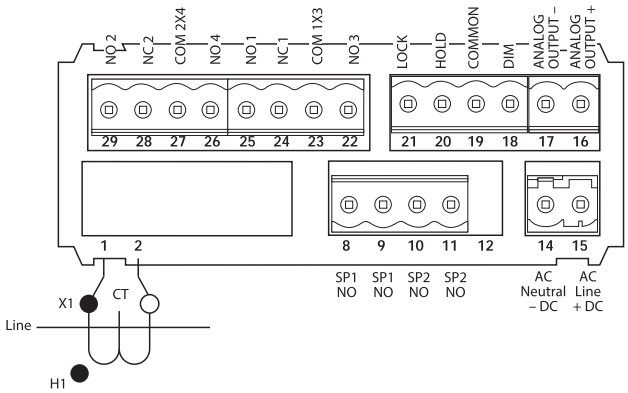

DIMENSIONS

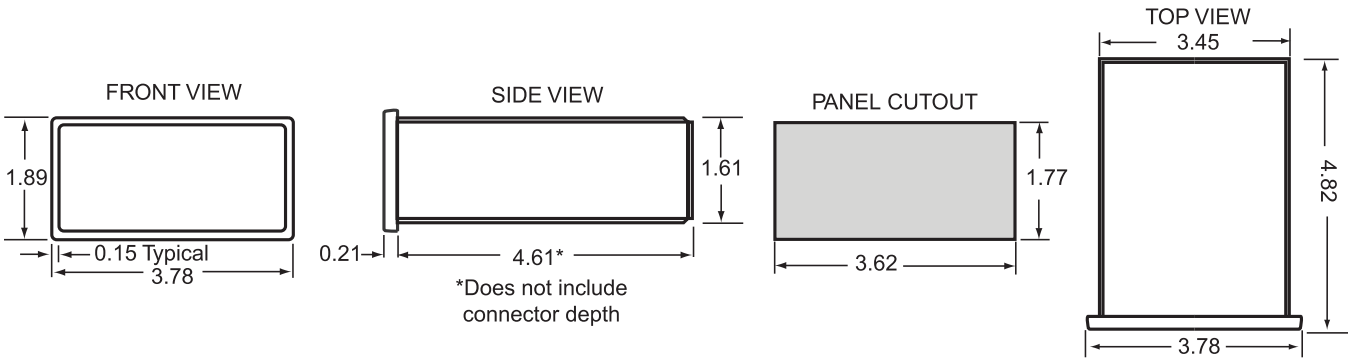

All Dimensions In Inches

FLEX-CORE®
Div. Morlan & Associates, Inc.
4970 Scioto Darby Rd. Hilliard, Ohio 43026
WWW.FLEX-CORE.COM
sales@flex-core.com
PHONE (614) 889-6152
TECH. ASSISTANCE (614) 876-8308
FAX # (614) 876-8538

DIGITAL PANEL METERS

DIGITAL VOLTMETER *MODEL* DL-40PSF-DR-PS1-IA01

Digital Meter for Monitoring and Measuring

FEATURES

- 4 Digit Red Led (0.56") with display range -1999 to 9999 (12000 counts)
- Auto-sensing AC/DC Power Supply
- Automatic Intelligent averaging smooths noisy signals
- Fast display response to real input signal changes
- User programmable input to display ratios
- Peak and Valley - View and Reset



SPECIFICATIONS

- Input ..... 0-600Vac Scaled RMS
- Accuracy ..... ± 0.05% of reading, ± 2 digit
- Inst. Power 85-265Vac/95-300Vdc
- Enclosure ..... 1/8 DIN CASE
- Screw Terminal Adapter ..... Included for inputs and power.
- Weight ..... Approximately 1 lb.
- Dimensions Meter Case ..... Width 3.45" (95.44mm)
  Height 1.6" (41.1mm)
  Max Depth 4.61" (117mm)
  Bezel ..... 3.78" X 1.89" (96 X 48mm)
  Panel Cutout ..... 3.62" X 1.77" (92 X 45mm)
- LED display ..... -1999 to +9999
  7 Segment, 0.56", 4 Digit

CONNECTOR PINOUTS

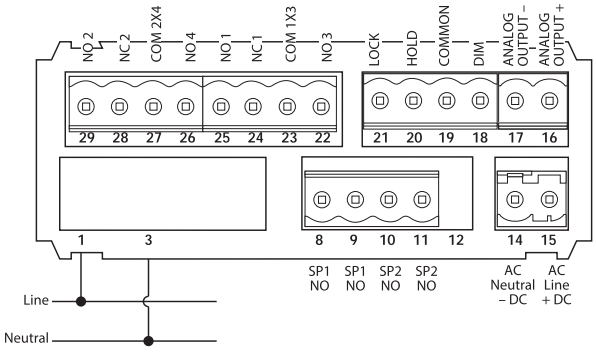

Program Button: This button is used to move from one program step to the next. When used simultaneously with the UP ARROW button, it initiates the Programming mode. When used simultaneously with the DOWN ARROW button, it initiates the Set point Program Mode.
Up Arrow: Increases the value of the displayed parameter.
Down Arrow: Decreases the value of the displayed parameter.

DIMENSIONS

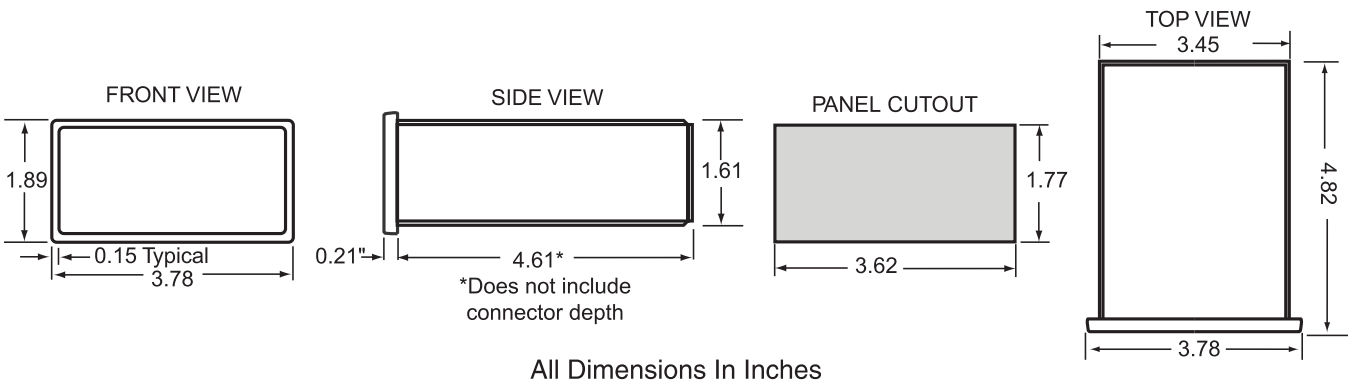

All Dimensions In Inches

FLEX-CORE®
Div. Morlan & Associates, Inc.
4970 Scioto Darby Rd. Hilliard, Ohio 43026
WWW.FLEX-CORE.COM
sales@flex-core.com
PHONE (614) 889-6152
TECH. ASSISTANCE (614) 876-8308
FAX # (614) 876-8538

DIGITAL PANEL METERS

DIGITAL BARGRAPH METER — *MODEL* FL-B101D40PS

Smart Tricolor or Monocolor Digital Bargraph With Programmable Scale Factor Has Fully Programmable Set Points for Monitoring, Measurement and Control Applications

FEATURES

- Inputs ..... Over 22 Input Modules
- Outputs ..... Up to two 5A 240Vac Form A Relays
  (16 Bit) 0-10V or 4-20mA Isolated Output (User scalable)
- Accuracy .....± 0.05% of reading, ± 2 digit
- Inst. Power 85-265Vac/95-370Vdc
  Or 18-48Vac/10-72Vdc
- Output Control..... Timed On/Off or High/Low
- Enclosure .....9/64 DIN CASE
- Screw Terminal Adapter ..... Included for inputs and power.
- Weight ..... Approximately 1 Lb.
- LED display ..... -1999 to +9999
  7 Segment, 0.31", 4 Digit
  101 Segment, 4.0", Bargraph

CE



Program Button: This button is used to move from one program step to the next. When used simultaneously with the UP ARROW button, it initiates the Programming mode. When used simultaneously with the DOWN ARROW button, it initiates the Set point Program Mode.
Up Arrow: Increases the value of the displayed parameter.
Down Arrow: Decreases the value of the displayed parameter.
Annunciator: May be programmed to indicate the set point status of up to 4 parameters.

ORDERING SPECIFICATIONS

Base Meter Model FL-B101D40PS		Dis.	P.S.	Input	Output
Complete Meter, Order:	FL-B101D40PS	-XX	-XXX	-XXX	-XX
Display					
None		xxx			
Red LED Bargraph with 4 digit red, horizontal		HRR			
Green LED Bargraph with 4 digit red, horizontal		HGR			
Red LED Bargraph with 4 digit green, horizontal		HRG			
Tricolor LED Bargraph with 4 digit red, horizontal		HTR			
Tricolor LED Bargraph with 4 digit green, horizontal		HTG			
Power Supply					
None			XXX		
85-265VAC/95-370Vdc			PS1		
18-48VAC/10-72Vdc			PS2		
Input Modules					
None				XXX	
AC-Volts Scaled RMS, 200/600V AC				IA01	
AC-Volts Scaled RMS, 200mV/2V/20V AC				IA02	
AC-mA Scaled RMS, 2/20/200mA AC				IA03	
AC-Amps Scaled RMS, 0-1 Amp AC (0-100.0)				IA04	
AC-Amps Scaled RMS, 0-5 Amp AC (0-100.0)				IA05	
AC-Volts True RMS, 200/600V AC				IA06	
AC-Volts True RMS, 200mV/2V/20V AC				IA07	
AC-mA True RMS, 2/20/200mA AC				IA08	
AC-Amps True RMS, 0-1 Amp AC (0-100.0)				IA09	
AC-Millivolt, Scaled RMS, 100mV AC				IA10	
AC-Amps True Rms, 0-5 Amp AC (0-100.0)				IA11	
DC-Volts, 2/20/200V/Custom w/24V DC Exc.				ID01	
DC-Millivolt, 20/50/100/200mV DC w/24V DC Exc.				ID02	
DC-MilliAmp, 2/20/200mA DC w/24V DC Exc.				ID03	
DC-Amps, 5A DC				ID04	
DC-Volts, 2/20/200/custom V DC w/offset and 24V Exc.				ID05	
DC-Amps, 1A DC				ID09	
Process Loop, 4-20mA (0-100.0)				IP01	
Process Loop, 4-20mA (0-100.0) w/24V DC Exc.				IP02	
Process Input, 1-5VDC = (0-100.0) w/offset, 24V Exc.				IP03	
Universal Process 2V/5V/10V/20V/200V/2mA/20mA/custom				IP07	
Prototype Bare Board for Customer Design				IPT1	

Output Options		Dis.	P.S.	Input	Output
None					XX
Single 10A Form C Relay					R11
Dual 10A Form C Relays					R12
Dual 10A Form C, One 5A Form A Relay					R13
Dual 10A Form C, Dual 5A Form A Relay					R14
Isolated 16 Bit Current Output, 4-20mA					OIC
Isolated 16 Bit Current Output, 0-10Vdc					OIV
Options (Add to Price of Meter)	**Part Number**				
NEMA 4X Clear Lockable Cover	OP-N4X/144X36				
Metal Surround for Case	OP-MTL144X36				
Metal Mount Clips (2pc.) for Thin Panels	OP-MTLCLIP				
For 144836mm From 6 Inch Cutout	OP-PA144X36				
Dimensions					
Meter Case	Width 5.69" (144mm)				
	Height 1.42" (36mm)				
	Max. Depth 4.64" (117.5mm)				
Bezel Dimensions	5.69" X 1.42" (144 X 36mm)				
Panel Cutout Size	5.45" X 1.30" (138 X 33mm)				

CONNECTOR PINOUTS

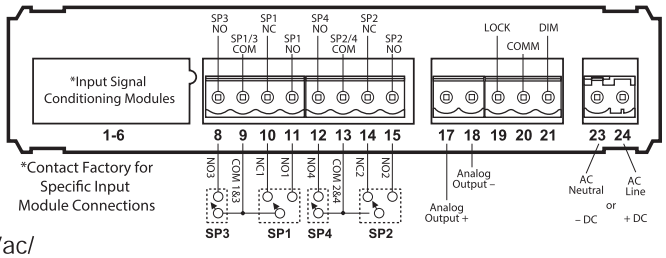

Auto-sensing AC/DC power supply. For voltages between 85-265Vac/ 95-370 Vdc (PS1) or 18-48Vac / 10-72 Vdc (PS2)

DIMENSIONS

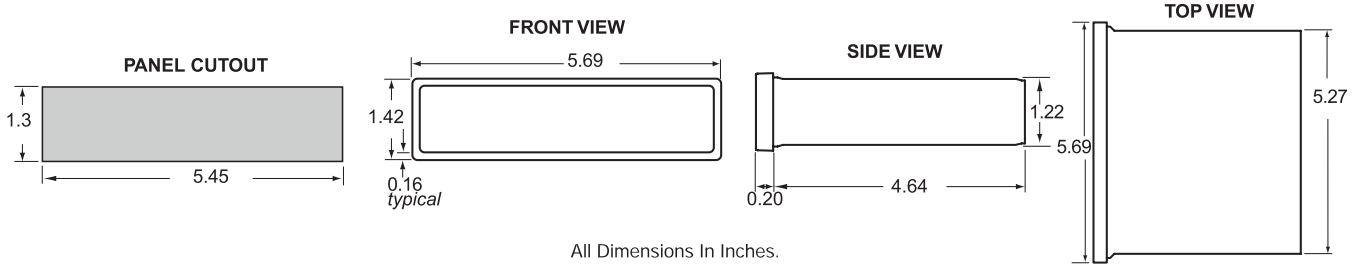

All Dimensions In Inches.

FLEX-CORE®
Div. Morlan & Associates, Inc.
4970 Scioto Darby Rd. Hilliard, Ohio 43026
WWW.FLEX-CORE.COM
sales@flex-core.com
PHONE (614) 889-6152
TECH. ASSISTANCE (614) 876-8308
FAX # (614) 876-8538

DIGITAL PANEL METERS

DIGITAL METER/CONTROLLER — *MODEL* DI-50T

Programmable Meter Controller for Monitoring, Measurement, Control, and Communication Applications.

FEATURES

- Inputs.....Over 40 Interchangable Input Modules
- Outputs.....25 Interchangable Output Modules
- Accuracy.....0.02%F.S.
- Inst. Power.....85-265Vac/95-300Vdc, 2W
  Or 14-48Vac/10-72Vdc, 2W
- Stores and Executes Custom Macro Programs
- Enclosure.....1/8 DIN CASE
- Screw Terminal Adapter..... Included for inputs and power.

c UL us LISTED E469078

CE



- Weight .....Approximately 1 lb.
- LED display .....-19999 to +99999
  Red (STD.), Green, or Super bright..... 7 Segment, 0.56"
  5 digit, 8 brightness levels, 6 LED Annunciators

ORDERING SPECIFICATIONS

Base Meter Model of DI-50T		Dis.	P.S.	Input	Output
Complete Meter, Order	DI-50T	-XX	-XXX	-XXXX	-XXXX
Display					
Red LED, 0.56" High		DR			
Green LED, 0.56" High		DG			
Super Bright Red LED, 0.56" High		DB			
Power Supply					
85-265Vac/95-300Vdc			PS1		
14-48Vac/10-72Vdc			PS2		
Inputs					
AC-Volts Scaled RMS, 200/**300v**				IA01	
AC-Volts Scaled RMS, 200mV/**2v**/20V				IA02	
AC-mA Scaled RMS, 2/**20**/200mA				IA03	
AC-Amps Scaled RMS, **1 Amp**				IA04	
AC Amps Scaled RMS, **5 Amp**				IA05	
AC-Volts True RMS, 200/**300V**				IA06	
AC-Volts True RMS, 200mV/**2V**/20V				IA07	
AC-mA True RMS, 2/**20**/200mA				IA08	
AC-Amps True RMS, **1 Amp**				IA09	
AC-Millivolt Scaled RMS, **100mV**				IA10	
AC-Amps True RMS, **5 Amp**				IA11	
DC- Volts 2/20/200V/Custom w/24Vdc Exc				ID01	
DC-Millivolt 20/50/**100**/200mVdc w/24Vdc Exc				ID02	
DC-Milliamp 2/**20**/200mAdc w/24Vdc Exc				ID03	
DC-Amps **5Adc**				ID04	
DC-Volts 2/20/200/Custom Vdc w/Offset and 24V Exc				ID05	
DC-Volts 2/20/200/Custom Vdc w/Ext. Decimal Select				ID06	
DC-Milliamp 2/**20**/200mAdc w/Offset and 24V Exc				ID07	
DC-Volts 2/20/200/Custom Vdc w/Ext. LIN Table Select				ID08	
DC-Amps **1Adc**				ID09	
Counter (Quadrature)				IC02	
Quadrature Counter with Dual SSRs				IC03	
Line Frequency, 60-300Vac				IF06	
Universal Frequency/RPM/UP DOWN Counter				IF10	
Single Phase Power, **300V/1A**				IW01	
Single Phase Power, **300V/5A**				IW02	
DC-Watts **10V/50mVdc**				IW03	
Process Loop, **4-20mA**				IP01	
Process Loop, **4-20mA** with 24Vdc Exc				IP02	
Process Input, **1-5Vdc** with Offset, 24V Exc				IP03	
Process Loop, 4-20mA with 24Vdc Exc and Autocal				IP06	
Universal Process 2V/5V/**10V**/20V/200V/2mA/20mA/ Custom				IP07	
4-20mA with External LIN Table Select				IP09	
Resistance, 2/**3**/4-Wire, 200Ω/**2Ω**/20kΩ				IR01	
Single Smart 3-Wire Potentiometer, 24 bit, 60Hz				ISR2	
Thermocouple (J/**K**/R/S/T/B/N)				IT01	
RTD, 100Ω Pt. 2/3/4-wire (-200 to 800°C)				IT03	
RTD, 100Ω Pt. 2/3/4-wire (-200 to 1470°F)				IT04	
RTD, 100Ω Pt. 2/3/4-wire (-199.0 to 199.0°F)				IT05	
RTD, 100Ω Pt. 2/3/4-wire (-199.0 to 199.0°C)				IT14	
Analog Outputs					
Dual Isolated 16 Bit Current Output, 4-20mA					ADC
Dual Isolated 16 Bit Voltage Ouptut, 0-10Vdc					ADV
Isolated 16 Bit Current Output, 4-20mA					AIC
Isolated 16 Bit Current Output, 0-10Vdc					AIV

Base Meter Model of DI-50T		Dis.	P.S.	Input	Output
Complete Meter, Order	DI-50T	-XX	-XXX	-XXXX	-XXXX
Serial Outputs					
USB communication module*					S1
Isolated RS-232**					S2
USB communication module (ModBus)*					S3
Isolated RS-485**					S4
Isolated Modbus RTU - RS-232, ASCII Code Compatible**					S5
Isolated Modbus RTU - RS-485, ASCII Code Compatible**					S6
Isolated Ethernet output for DI models only*					S8
Modbus Ethernet output for DI models only*					S9
Relay Outputs					
One 10A Form C Relay, Isolated					OR11
Two 9A Form C Relays, Isolated					OR12
Two 9A Form C & Two 4A Form A Relays, Non-isolated					OR14
One 9A Form C & Two 4A Form A Relays, Non-isolated					OR15
One 9A Form C & One 4A Form A Relays, Isolated					OR16
Two 9A Form C & One 4A Form A Relays, Isolated					OR23
One 9A Form C & Two 4A Form A Relays, Isolated					OR25
One 5A Form A Relay, Isolated					OR31
Two 5A Form A Relays, Isolated					OR32
Three 5A Form A Relays, Isolated					OR33
Four 5A Form A Relays, Isolated					OR34
Five 4A Form A Relays, Non-isolated					OR45
Six 4A Form A Relays, Non-isolated					OR46
One 300Vdc Solid State Relay (SSR) 210mA					OR51
Two 300Vdc Solid State Relays (SSR) 210mA					OR52
Three 300Vdc Solid State Relays (SSR) 210mA					OR53
Four 300Vdc Solid State Relays (SSR) 210mA					OR54
Six 5Vdc 50mA outputs to drive external SSR's or Logic Input Devices					OR71
Six open collector outputs to drive external SSR's or Logic Input Devices, 5Vdc 50mA					OR72
Six Outputs and Six inputs for connecting to External Breakout Box, 50Vdc 100mA, T version only					OR81
Sixteen Outputs and Six Inputs for connecting to External Breakout Box, 50Vdc 100mA, T version only					OR82
Data Acquisition Module with Removable 2GB SD cards and two SSR Outputs (50Vdc 100mA)					OR91
Special Options					
Custom display scaling within standard ranges	CS-5				
Output Module Carrier Board	SA-DI/CB				
Cusom scaling of analog output for digital meters	COA-5				
Range Change from Standard Range shown in Bold Types	CR-Change				
Accessories					
USB Cable	91-USB/CBL				
RS232: DB9 female to RJ6 phone plug adapter plus 6ft. RJ6 Cable	OM-CABLE232				
RS489: DB9 female to RJ6 phone plug adapter plus 6ft. RJ6 Cable	OM-CABLE485				
Black Bezel for 96x48mm Case	75-DBBX9648F				
Mounting Side Clips, extra set (96x48mm case size)	75-DMTCLIPF				
96x48mm Complete Case with Bezel	DN.CAS96X48				
Metal Surround Case, includes screw mounting clips	OP-MTL96X48				
Screw Mounting Clips (2pc) to scre tighten slide brackets	OP-MTLCLIP				
Modbus/Eternet to Serial Tbase 10 Converter	CV-MOD/TB10				
Serial to Tbase 10 Converter	CV-RS/TB10				
Serial to Tbase 10/100mg Comverter	CV-RS/TB100				
96x48mm clear lockable front cover NEMA 4X, splash proof	OP-N4X/96/48				
Panel to Case Seal Adapter with O-Ring and Foam Gasket	OP-OSA/96X48				
USB to 9DB RS232 Converter	CV-USB/232				

*Includes a special Output Carrier Board that accepts analog outputs and I/O modules.
**Requires a Cable and a Carrier Board.

FLEX-CORE®
Div. Morlan & Associates, Inc.
4970 Scioto Darby Rd. Hilliard, Ohio 43026
WWW.FLEX-CORE.COM
sales@flex-core.com
PHONE (614) 889-6152
TECH. ASSISTANCE (614) 876-8308
FAX # (614) 876-8538

DIGITAL PANEL METERS

DIGITAL METER/CONTROLLER — *MODEL* DI-50T

FRONT PANEL CONTROLS

Program Button

While programming, pressing the P button saves the current programming settings and moves to the next programming step. You can move through the programming codes using the program button. The codes you pass are not affected, unless you stop and make changes using the ↑ or ↓ buttons. Pressing the P and ↑ at the same time initiates the **main programming mode**. To save a new configuration setting and return to the operational display, press the P button once and then press the P and ↑ at the same time. Pressing the P and ↓ at the same time initiates the **setpoint programming mode**. To save a new configuration setting and return to the operational display, press the P button once and then press the P and ↓ button at the same time. See *Display Diagram*.

DISPLAY

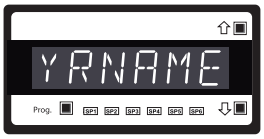

Up Button

When setting a displayed parameter during programming, press the ↑ button to increase the value of the displayed parameter. When in operational display, pressing the ↑ button initiates a viewing mode that allows you to view the readings on **channels 1 and 3, setpoints 1, 3, and 5, peak and total** 1. Once into the viewing routine, pressing the ↓ button moves through each displayed parameter. See *Display Diagram*.

Down Button

When setting a displayed parameter during programming, press the ↓ button to decrease the value of the displayed parameter. When in the operational display, pressing the ↓ button initiates a viewing mode that allows you to view the readings on **channes 2 and 4, setpoints 2, 4, and 6, valley, and total 2**. Once into the viewing routine, pressing the ↓ button moves through each displayed parameter. See *Display Diagram*.

CONNECTOR PINOUTS

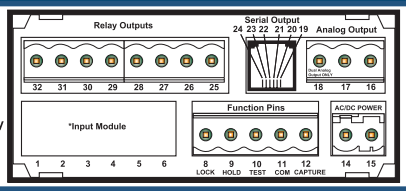

*Contact factory for specific input module connections

DIMENSIONS

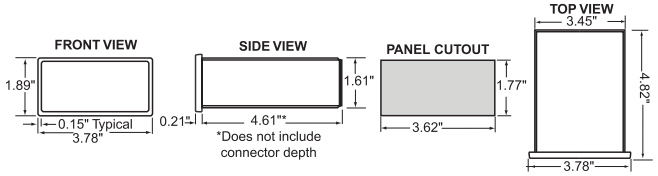

OUTPUT CONNECTIONS

CARRIER BOARD OUTPUT PINS

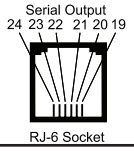

Analog Outputs
- Pin 16 - Positive (+) analog output 1.
- Pin 17 - Negative (-) analog output 1 and 2.
- Pin 18 - Positive (+) analog output 2.

Serial Outputs RS-232 or RS-485

Pin No.	RS-232	RS-485
19	Reserved for future use	Reserved for future use
20	RXD. Received Serial	B (Low)
21	TXD. Transmitted Serial	A (High)
22	+5Vdc to power and external converters.	+5Vdc to power and external converters.
23	Isolated Ground	Isolated Ground
24	Reserved for future use	Reserved for future use

Ethernet - The ethernet carrier board has the same analog output pins, with 10/100 Base-T Ethernet (RJ-45 Socket).

OPTO ISOLATED I/0 MODULE (OR8X)

Opto Isolated I/0 Module for Externall Breakout Box with 6 Outputs & 6 Inputs, or 16 Outputs & 6 Inputs.

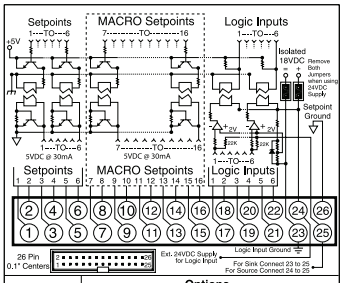

Order Code	Options		
	NPN Open Collector Max 50V @ 100mA		Sink/Source
	Setpoint	MACRO Setpoint	Logic Input
OR81	6 Outputs	-	6 Inputs
OR82	6 Outputs	10 MACRO Outputs	6 Inputs

RELAY OUTPUTS (OR1X & OR2X)

RelaysRelay Modules with up to two 4/5A Form A Relays, and up to two 9/10A Form C Relays

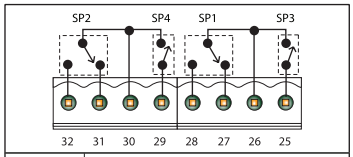

Order Code	Options			
	SP2	SP4	SP1	SP3
OR11	-	-	10A	-
OR12	9A	-	9A	-
OR23	9A	4A	9A	-
OR14	9A	4A	9A	4A
OR15	-	4A	9A	4A
OR16	-	4A	9A	-

RELAY MODULES (OR5X)

Relay Modules with up to 4 Independent 300V (21mAdc only) SSRs

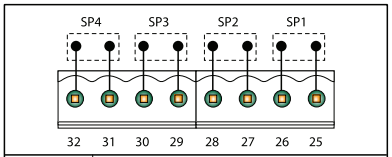

Order Code	Options			
	SP4	SP3	SP2	SP1
OR51	-	-	-	210mA
OR52	-	-	210mA	210mA
OR53	-	210mA	210mA	210mA
OR54	210mA	210mA	210mA	210mA

RELAY MODULES (OR4X)

Relay Modules with five or six 4A Form A Relays

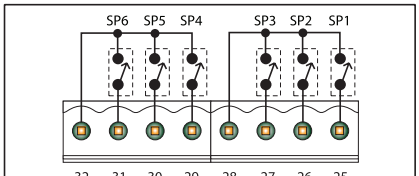

Order Code	Options					
	SP6	SP5	SP4	SP3	SP2	SP1
OR45	-	4A	4A	4A	4A	4A
OR46	4A	4A	4A	4A	4A	4A

RELAY MODULES (OR3X)

Relay Modules with up to four 5A Form A Relays

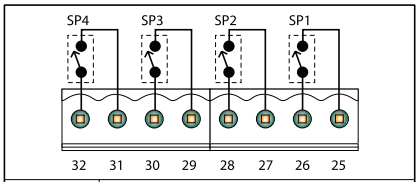

Order Code	Options			
	SP4	SP3	SP2	SP1
OR31	-	-	-	5A
OR32	-	-	5A	5A
OR33	-	5A	5A	5A
OR34	5A	5A	5A	5A

Note: Call for Open Collector (OR7X) and Flash Card (OR9X)

FLEX-CORE®
Div. Morlan & Associates, Inc.
4970 Scioto Darby Rd. Hilliard, Ohio 43026
WWW.FLEX-CORE.COM
sales@flex-core.com
PHONE (614) 889-6152
TECH. ASSISTANCE (614) 876-8308
FAX # (614) 876-8538

DC SHUNTS

MODEL **S**

DESCRIPTION

- For inputs to shunt rated DC ammeters, DC watt transducers (model MT) and shunt isolators (model VT7)
- Available in 50mV or 100mV models.
- ± 0.25% of calibrated accuracy



NOTE:
These shunts are designed to be run at 2/3 of rated current.
A 10A application would require a 15A shunt.
This is required to maintain accuracy.

50mV Shunts			100mV Shunts		
Amps	Catalog No.	Ref. Fig.	Amps	Catalog No.	Ref. Fig.
10	S50-010	A	10	S100-010	A
15	S50-015	A	15	S100-015	A
20	S50-020	A	20	S100-020	A
30	S50-030	A	30	S100-030	A
50	S50-050	A	50	S100-050	A
100	S50-100	A	100	S100-100	A
200	S50-200	B	200	S100-200	B
300	S50-300	B	300	S100-300	B
500	S50-500	B	500	S100-500	B
750	S50-750	C	750	S100-750	C
1000	S50-1000	C	1000	S100-1000	C
1200	S50-1200	C	1200	S100-1200	C

DIMENSIONS

FIG. A

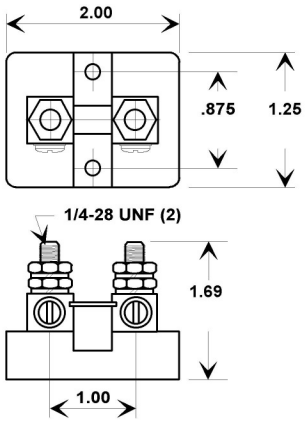

Weight: 4.0 oz.

FIG. B

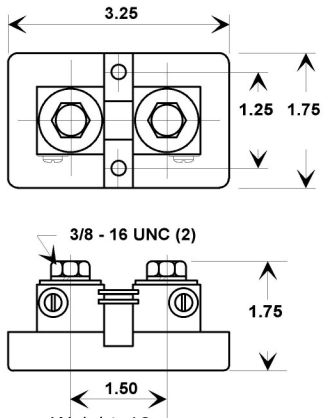

Weight: 12 oz.

FIG. C

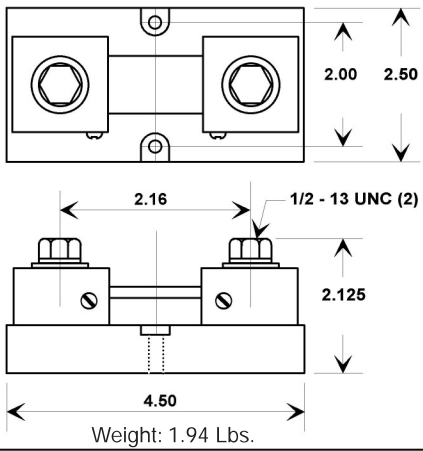

Weight: 1.94 Lbs.

All Dimensions In Inches

FLEX-CORE®
Div. Morlan & Associates, Inc.
4970 Scioto Darby Rd. Hilliard, Ohio 43026
WWW.FLEX-CORE.COM
sales@flex-core.com
PHONE (614) 889-6152
TECH. ASSISTANCE (614) 876-8308
FAX # (614) 876-8538

ALPHABETICAL INDEX

ALPHABETICAL INDEX

MODELS	DESCRIPTION	PAGES
110	Solid Core Relay/Metering Class CT	41
114	Solid Core Relay/Metering Class CT	42
125, 126	Solid Core Metering Class CT	35
125-1V, 126-1V	Solid Core Metering Class CT (1.0V)	36
130	Solid Core Relay/Metering Class CT	43
143, 143MR	Solid Core Relay/Metering Class CT	44-45
147	Solid Core Relay/Metering Class CT	49
17SC	Shorting Terminal Block	73
180RL	Solid Core Metering Class CT	33
189	Wound Primary Current Transformer	51
190X, 190XSUM	Auxiliary and Summing Current Transformer	52
191, 194, 195	Solid Core Metering Class CT	40
19RL, 19SHT	Solid Core Metering Class CT	34
19SHT-1V	Solid Core Metering Class CT (1.0V)	36
240	Elapsed Time Meter	74
257	Phase Loss Monitor	161
272	Current Unbalance Detector	163
2DARL	Solid Core Metering Class CT	30
2RL	Solid Core Current Transformer (Small)	27
2SFT	Solid Core CT with Mounting Bracket (Small)	28
2VT460	3P Open Delta Low Voltage Potential Transformer	62
2VT469	3P3W Low Voltage Potential Transformer	61
331	Removable Leg Current Transformer (Multi-Ratio)	13
3ACT	3 Phase Current Transducer (UL)	97
3AVT	2 Phase Low Voltage Transducer (UL)	117
3CTR	3 Phase RMS Current Transducer	99
3PT3	3P3W MV Indoor Potential Transformer, 5KV Class	66
3VTL	3 Phase Low Voltage Potential Transformer	63
3VTN	3 Phase Low Voltage Potential Transformer	64
3VTR	3 Phase RMS Voltage Transducer	119
456	Low Voltage Potential Transformer (.3%)	60
460, 468	Low Voltage (600V) Potential Transformers (.6%)	59
4LSF	Split Core Revenue Grade Current Transformer (0.333V)	11
500T	Removable Leg Current Transformer	17
584MM	Outdoor Analog Panel Meters	172
5ARL	Solid Core Metering Class CT	31
5SFT	Solid Core CT with Mounting Bracket (Small)	28
58RBL	Solid Core CT with Mounting Bracket	29
600, 601, 617	Removable Leg Current Transformer	14
606 ,608	Weatherproof Removable Leg Current Transformer	16
60RBT	Solid Core Metering Class CT	32
615, 616	Removable Leg Current Transformers	15
7RL	Solid Core Current Transformer (Small)	27
7RBL, 76RBL	Solid Core CT with Mounting Bracket	29
780	Solid Core Relay/Metering Class CT	46
781MR	Solid Core Relay/Metering Class CT	47-48
9524	Voltage and Current Selector Switch	164-166
A		
ACP	Rogowski Coil Current Transformer (3V)	21
ACT	AC Current Transducer	96
ACTR	RMS Current Transducer (UL)	98
AFT	Frequency Transducers (UL)	155
AGH	Precision Watt/Watt Hour Transducer	149-150
AGW	Precision AC Watt Transducer (UL)	130-131
AT0,1,2; ATR0,1,2	Solid and Split Core Current Transformer/Transducer	92
AT3, 4; ATR3, 4	Solid Core Current Transformer/Transducer	93
AVT	AC Voltage Transducer (UL)	116
AVTR	RMS Voltage Transducer (UL)	118
B		
BMM603	DIN Rail Mount Fuse Block	72
C		
CRD-005	DC Current Set Point Relay	82
CRD-020	AC Current Set Point Relay	81
CS	AC Current Switch	83
CT-4809	Split Core DC Current Transducer	103
CT-4812	Split Core DC Current Transducer	104-105
CT-4820	Split Core DC Current Transducer	106
CT7, CT8	DC and Variable Frequency RMS Current Transducer	102
CTC	Solid Core Current Transformer/Transducer	89
CTCR	Solid Core RMS Current Transformer/Transducer	90
CTD	Solid Core Current Transformer/Transducer	91
CTG	DC Current Transducer	107
CTH	DC Current Transducer	108-109
CTL, CTA	DC and RMS Current Transducer/Signal Conditioner	110-114
CTM-0C	600V Bar Type Current Transformer Metering (3%)	50
CTRS	RMS Current Transducer/CT	85
CTWH3-60-T50	MV Bar Type Current Transformers, 5KV Class	53
D		
DI-50T	Digital Panel Meter/Controller	178-179
DL-40PSF	Digital Panelboard Meter (Programmable)	174
DL-40PSF-DR-PS1-IA01	Digital Panelmount Voltmeter	176
DL-40PSF-DR-PS1-IA05	Digital Panelmount Ammeter	175
DS3-SDT-24U	DC Current Operated Switch	84
DT	DC Current Transducer	101
E		
E5-024-C0400	Digital Counter	74
F		
FC	Flexible Split Core Current Transformer (Non UL)	8-9
FCL	Flexible Split Core Current Transformer	4-7
FCR	Split Core Relay/Metering Class Current Transformer	10
FL-B101D40PS	Digital Bargraph Meter	177
FP2	Fuse Puller for BMM603	72
G		
GFP, GFL	Ground Fault Current Monitor	77-80
GH	Precision AC Watt/Watthour Transducer	152-154
GW5, GV5	Precision AC Watt and AC Var Transducer	140-142
GWV5	Precision AC Watt/Var Transducer	143-144
H		
H221, H321, H421	Split Core Current Transformer/Transducer	88
H32	AC Current Clamp	25
H921, H922, H923	Low Cost Split Core CT/Transducer	87
HLS110	Industrial Switchboard Meter	173
HST90U	Analog Panel Meter	171
J		
JAK-0C	Solid Core Metering Class CT (Indoor/Optional Outdoor)	37
JAK-0S	High Accuracy Solid Core Metering Class CT	38-39
JCK-3, JCK-4	MV Outdoor Current Transformer, 5KV/8.7KV Class	56
JCK-5C	MV Bar Type Current Transformer, 15KV Class	57-58
JKM-3C	MV Bar Type Current Transformer, 5KV Class	54
JKM-5C	MV Bar Type Current Transformer, 15KV Class	55
JVW-3	MV Outdoor Potential Transformer, 5KV Class	69
JVW-5C	MV Outdoor Potential Transformer, 15KV Class	70
K		
KLK	Fuse Block	71
L		
LN4F	Split Core Revenue Grade Current Transformer (0.333V)	12
LRB	Current to Voltage Converter	160
M		
M1, M2	AC Current Microclamp	23
MCT5	DIN Rail AC Current Transducer	94
MCTR	DIN Rail AC Current Transducer RMS	95
MGT	RMS Current Transducer (.333V in = 4-20mA out)	100
MMR, MMB	AC Current Clamp Accessories	26
MSG	DIN Rail Process Signal Conditioner	159
MVT	DIN Rail AC Voltage Transducer	115
MVTR	DIN Rail RMS Voltage Transducer	120
N		
N25	Voltage and Current Selector Switch (Panelboard)	167-170
NS	AC Current Clamp	24
O		
OCP	CT Open Circuit Protector	75-76
P		
P32	AC Current Clamp	25
P	Variable Frequency Watt Transducer/Hall Probe	135-137
PC20	AC Watt/PF/VA Transducer	132-134
PC5, PC4	AC Watt Transducer	126-129
PC8	DC Watt Transducer/Hall Probe	124-125
PF5	Phase Angle Transducers	156-157
PT3	MV Indoor Potential Transformer, 5KV Class	65
PTB	Multiple Output AC Power Transducer	138-139
PTG5	MV Indoor Potential Transformer, 15KV Class	67-68
R		
RCS-1800, RCT-1800	Rogowski Coil Current Transformer (0.333V)	22
S		
S	DC Shunts	180
SCS	Split Core AC Current Switch	83
SCT	Split Core Current Transformer/Transducer	86
SCT-0400, SCT-0750	Split Core Current Transformer (0.333V)	18
SCT-1250, SCT-2000	Split Core Current Transformer (0.333V)	19
SCT-3000	Split Core Current Transformer (0.333V)	20
SG	Process Signal Conditioner	158
SMART SOCKET	Smart Socket for 257	162
SWH	1 Phase Watt Hour Transducer/Split Core CT	151
T		
TMP	AC Current Clamp Accessories	26
U		
U3889	Voltage and Current Switch Assembly	71
V		
VFC	Precision Integrator	160
VGH	Precision AC Var/Var Hour Transducer	152-154
VT7, VT8	DC or Variable Frequency Transducer	121
VTH	DC High Voltage Transducer (Unidirectional)	123
VTU	DC Voltage Transducer (Unidirectional)	122
W		
W, W4	AC Watt/Watt Hour Transducer	145-148

FLEX-CORE®
Div. Morlan & Associates, Inc.
4970 Scioto Darby Rd. Hilliard, Ohio 43026

WWW.FLEX-CORE.COM
sales@flex-core.com

PHONE (614) 889-6152
TECH. ASSISTANCE (614) 876-8308
FAX # (614) 876-8538

FLEX-CORE®

Div. Morlan & Associates, Inc.

Large In Stock Inventory
Friendly Customer Service
Same Day Shipping

Can't find what you're looking for?
Ask for custom solutions and part number cross reference assistance

Flexible Split Core Current Transformer



Split Core Current Transformers

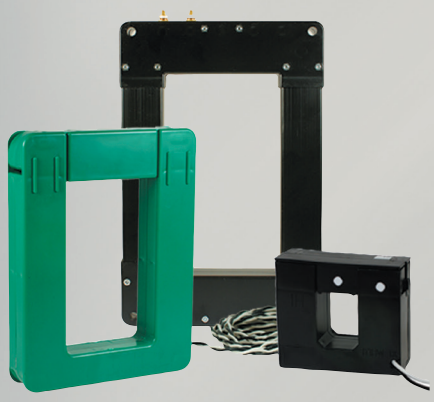

Solid Core Current Transformers

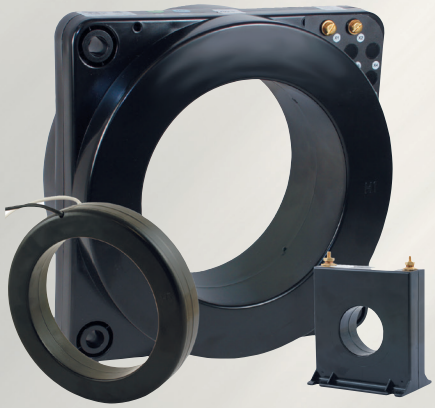

Medium Voltage Transformers

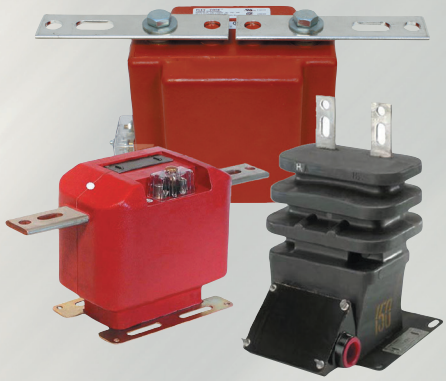

Potential Transformers



Accessories

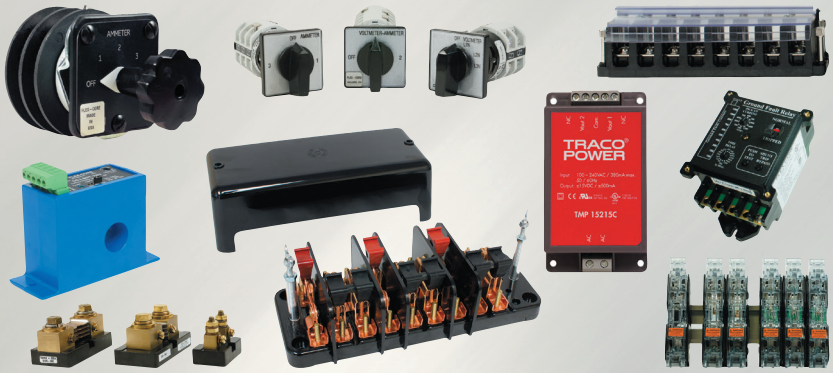

Transducers

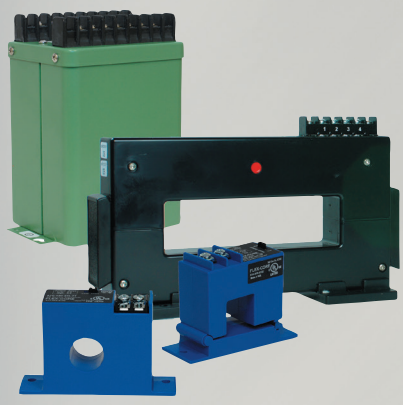

Meters



4970 Scioto Darby Rd
Hilliard, OH 43026
www.flex-core.com

P: (614)889-6152
F: (614)876-8538
sales@flex-core.com
2020