CURRENT TRANSFORMERS

METERING CLASS CURRENT TRANSFORMER *MODEL* 2DARL

FEATURES

- Revenue Metering Applications
- UL Recognized
- Window I.D. - 1.00"
- For use with long runs of secondary wiring

600V CLASS

c UL us E238872 CSA 245941

RoHS COMPLIANT

MADE IN U.S.A.

SPECIFICATIONS

Frequency 50-400Hz
Insulation class ..... 0.6kV, 10kV BIL Full Wave
Leads ..... 16 AWG, 24" long, UL105°C
Weight ..... Approximately 0.9 Lb.
Rating Factor ..... 50:5-150:5 ..... 2.0 @ 30°C
200:5-300:5 ..... 1.5 @ 30°C

Manufactured to meet the requirements of ANSI/IEEE C57.13

APPLICATION AND ORDERING DATA

CATALOG NUMBER	CURRENT RATIO	V.A. FOR ±1% CLASS	ANSI METERING CLASS AT 60Hz			SECONDARY WINDING RESISTANCE (Ω@75°C)
			B0.1	B0.2	B0.5	
2DARL-500	50:5	2.5	4.8	-	-	0.008
2DARL-600	60:5	2.5	1.2	4.8	-	0.011
2DARL-750	75:5	3.5	1.2	2.4	-	0.015
2DARL-800	80:5	4.0	1.2	2.4	4.8	0.016
2DARL-101	100:5	5.0	1.2	2.4	4.8	0.018
2DARL-121	120:5	5.0	1.2	2.4	2.4	0.022
2DARL-1250	125:5	5.0	0.6	1.2	2.4	0.028
2DARL-151	150:5	10.0	0.6	1.2	1.2	0.031
2DARL-201	200:5	12.5	0.3	0.6	1.2	0.047
2DARL-251	250:5	15.0	0.3	0.3	0.6	0.074
2DARL-301	300:5	20.0	0.3	0.3	0.6	0.089

EXCITATION CURVE

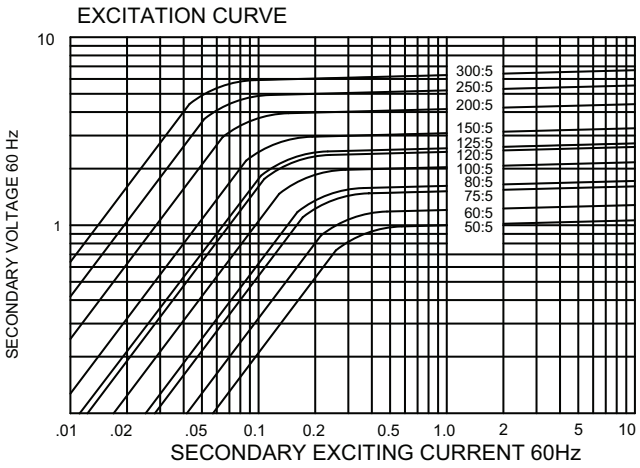

DIMENSIONS

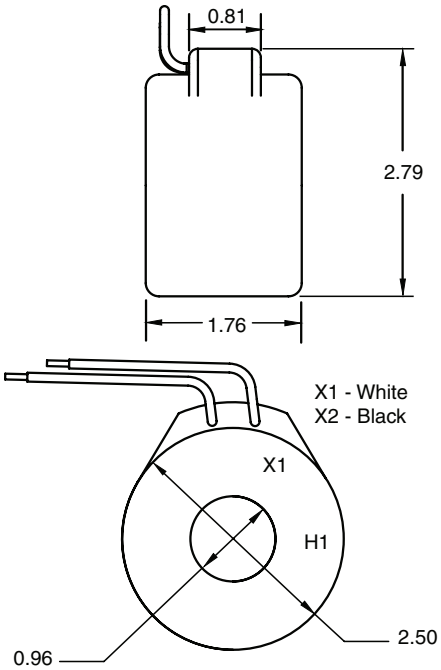

All Dimensions In Inches

FLEX-CORE®
Div. Morlan & Associates, Inc.
4970 Scioto Darby Rd. Hilliard, Ohio 43026

WWW.FLEX-CORE.COM
sales@flex-core.com

PHONE (614) 889-6152
TECH. ASSISTANCE (614) 876-8308
FAX # (614) 876-8538