POTENTIAL TRANSFORMERS

OUTDOOR POTENTIAL TRANSFORMER *MODEL* JVW-5C

SPECIFICATIONS

15KV CLASS

Designed for outdoor service.
Suitable for operating meters, instruments, relays and control devices.

THERMAL RATING (VOLT-AMPERES)
1500VA @ 30°C Ambient

DIMENSIONS/WEIGHT
Height ..... 16.34"
Depth ..... 13.69"
Width ..... 11.50"
Weight ..... Approximately 80 Lbs.

INSULATION LEVEL ..... 15.5kV, 110kV BIL

FREQUENCY 60Hz

Manufactured to meet the requirements of ANSI/IEEE C57.13

JVW-5C are manufactured using Hydrophobic Cycloaliphatic Epoxy (HCEP). Insulation levels meet or exceed those specified in IEEE C57.13 and CSA CAN3-C13. Dimensions meet IEEE C12.11. Superior designs, HCEP epoxy, and APG processes, are combined to produce the highest quality and reliability available in the industry for outdoor applications.

APPLICATION AND ORDERING DATA

CATALOG NUMBER	RATED PRIMARY VOLTAGE	RATIO	IEEE METERING ACCURACY	RATED VOLTAGE FACTOR	THERMAL RATING (VA @ 30°C AMB.)
Single Bushing Style					
765C130101	7200/12470GY	60:1	0.3 W, X, M, Y, Z, 1.2 ZZ	1.1	1500
765C130102	7620/13200GY	63.5:1	0.3 W, X, M, Y, Z, 1.2 ZZ	1.1	1500
765C130103	8400/14560GY	70:1	0.3 W, X, M, Y, Z, 1.2 ZZ	1.1	1500
Double Bushing Style					
765C130201	7200/12470Y	60:1	0.3 W, X, M, Y, Z, 1.2 ZZ	1.1	1500
765C130202	7620/13200Y	63.5:1	0.3 W, X, M, Y, Z, 1.2 ZZ	1.1	1500
765C130203	8400/14560Y	70:1	0.3 W, X, M, Y, Z, 1.2 ZZ	1.1	1500
765C130204	12000/12000Y	100:1	0.3 W, X, M, Y, Z, 1.2 ZZ	1.1	1500
765C130205	13200/13200Y	110:1	0.3 W, X, M, Y, Z, 1.2 ZZ	1.1	1500
765C130206	14400/14400Y	120:1	0.3 W, X, M, Y, Z, 1.2 ZZ	1.1	1500

DIMENSIONS

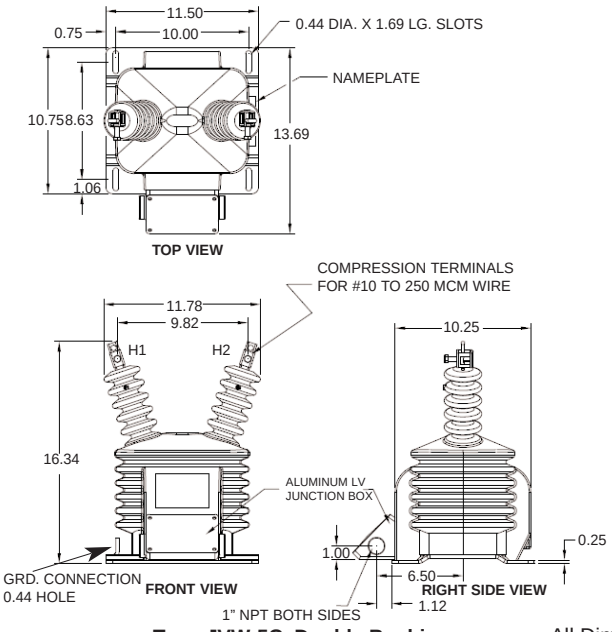

Type JVW-5C Double Bushing

All Dimensions In Inches

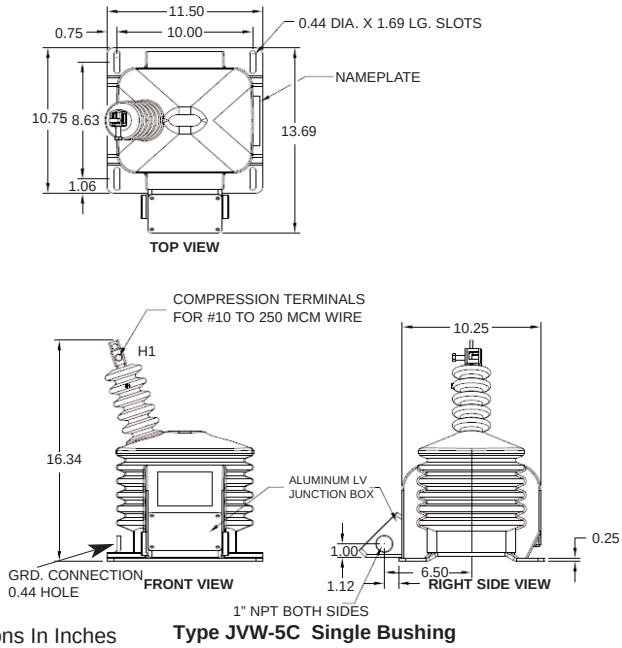

Type JVW-5C Single Bushing

FLEX-CORE®
Div. Morlan & Associates, Inc.
4970 Scioto Darby Rd. Hilliard, Ohio 43026

WWW.FLEX-CORE.COM
sales@flex-core.com

PHONE (614) 889-6152
TECH. ASSISTANCE (614) 876-8308
FAX # (614) 876-8538