CURRENT TRANSFORMERS

METERING CLASS CURRENT TRANSFORMER *MODEL* 60RBT

FEATURES

- UL Recognized
- Window I.D. - 0.94"
- Metering Applications

® E93779 ® LR89403

600V CLASS

SPECIFICATIONS

Frequency.....50-400Hz
Insulation Class .....0.6kV, 10kV BIL Full Wave
Terminals .....Brass Studs No. 8-32 UNC
with one flat washer, lock washer and regular nut.
Weight ..... Approximately 5.25 Lbs.
Manufactured to meet the requirements of ANSI/IEEE C57.13

APPLICATION AND ORDERING DATA

CATALOG NUMBER	CURRENT RATIO	VA FOR ± 6% CLASS	VA FOR ± 3% CLASS	ANSI METERING CLASS AT 60Hz					SECONDARY WINDING RESISTANCE (Ω @ 60Hz)	CONTINUOUS THERMAL RATING FACTOR	
				B0.1	B0.2	B0.5	B0.9	B1.8		@30°C	@55°C
60RBT-500	50:5	10.0	2.5	1.2	4.8	-	-	-	0.018	2.0	2.0
60RBT-600	60:5	15.0	3.0	1.2	2.4	-	-	-	0.021	2.0	2.0
60RBT-750	75:5	-	10.0	0.6	1.2	4.8	-	-	0.027	2.0	2.0
60RBT-800	80:5	-	15.0	0.6	1.2	2.4	4.8	-	0.028	2.0	2.0
60RBT-101	100:5	-	7.5±1%	0.6	0.6	2.4	4.8	4.8	0.037	2.0	2.0
60RBT-121	120:5	-	12.5±1%	0.6	0.6	1.2	2.4	4.8	0.043	2.0	2.0
60RBT-1250	125:5	-	15.0±1%	0.6	0.6	1.2	2.4	4.8	0.044	2.0	2.0
60RBT-151	150:5	-	20.0±1%	0.3	0.3	0.6	1.2	2.4	0.055	2.0	1.5
60RBT-201	200:5	-	25.0±1%	0.3	0.3	0.3	0.6	1.2	0.073	2.0	1.5

DIMENSIONS

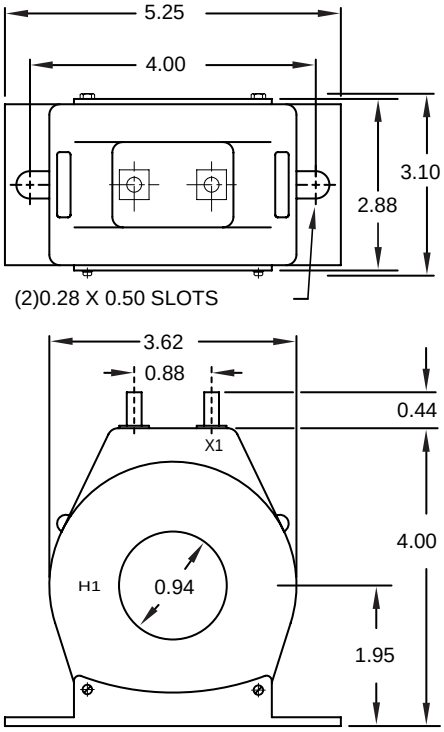

All Dimensions In Inches

EXCITATION CURVE

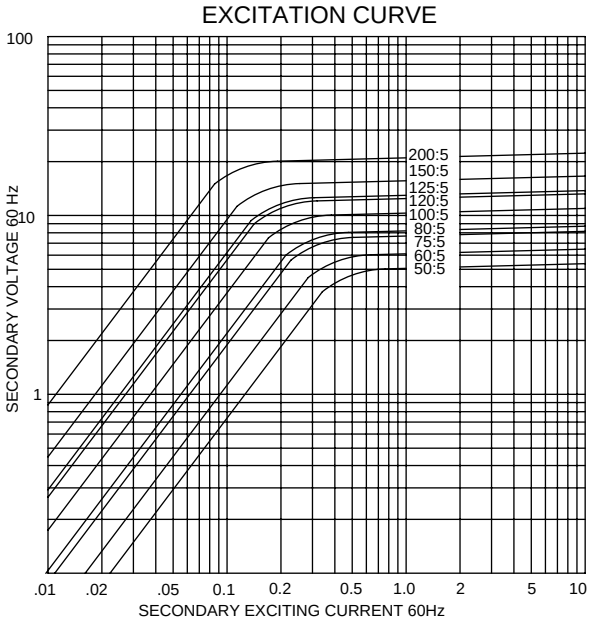

FLEX-CORE®
Div. Morlan & Associates, Inc.
4970 Scioto Darby Rd. Hilliard, Ohio 43026

WWW.FLEX-CORE.COM
sales@flex-core.com

PHONE (614) 889-6152
TECH. ASSISTANCE (614) 876-8308
FAX # (614) 876-8538